TADANO

ATF160G-5

200 Ton Capacity (181.4 Metric Tons)

ALL TERRAIN CRANE

DIMENSIONS

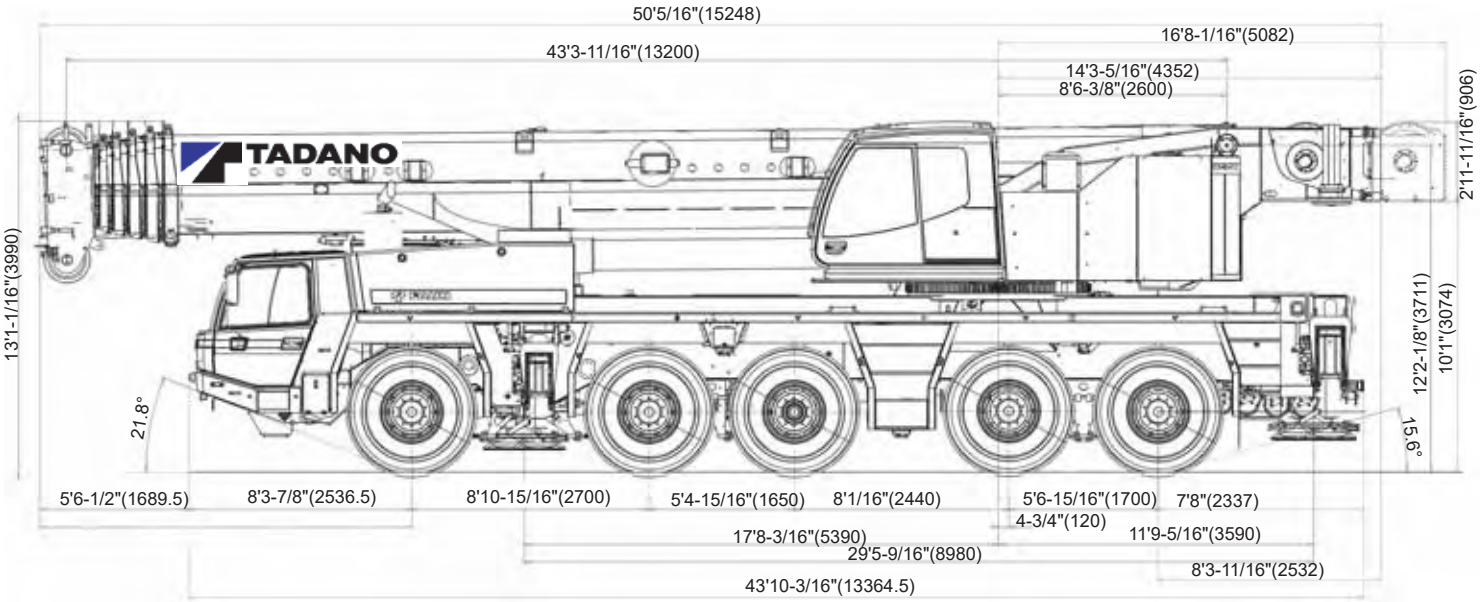

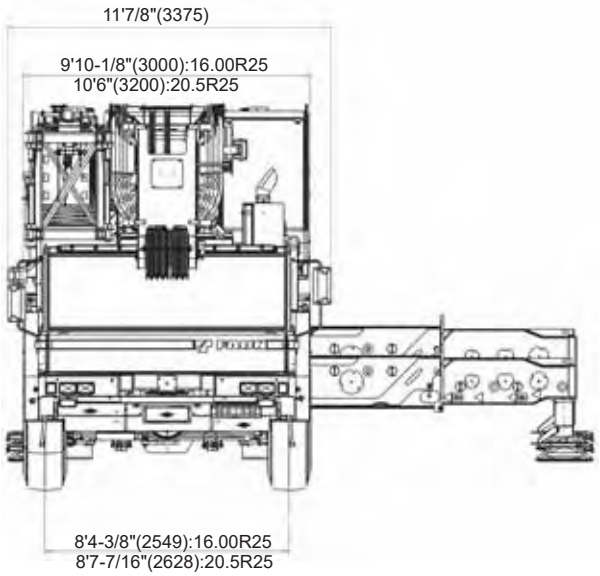

TURNING RADIUS

Steering	Front wheel (10x4)	All wheel (10x8)
Carrier inside	21' 11-3/4" (6.7m)	17' 4-11/16" (5.3m)
Over carrier	40' 8-3/16" (12.4m)	35' 9-1/8" (10.9m)
Over boom	42' 7-13/16" (13.0m)	38' 11/16" (11.6m)
Over boom extension	45' 1-5/16" (13.75m)	40' 4-1/4" (12.3m)

FAUN purpose built, 5 axle, box-type, torsion resistant, welded construction made of high tensile steel with integrated outrigger housings. Equipped with front and rear fenders, front and rear towing and tie-down lugs and towing connections and access ladders.Central lubrication system.

1.2 OUTRIGGERS

Four point, fully hydraulic, double telescopic outriggers with horizontal and vertical motions are independently controlled by electro-magnetic valves. Push button controls with level gauges on both sides of carrier and in super-structure cab. Vertical cylinders with integral holding valves. Large sized floats can be stored on vertical cylinders or on carrier for road travel.
Outrigger base: length 27'2-3/4" (8.3m), width 29' 5-9/16"(8.98m)
Mid. extension 18' 4-1/2" (5.6m).
Outrigger floats 1'11-5/8"(600mm) x 1'11-5/8"(600mm)

1.3 CARRIER ENGINE

Mercedes Benz 8 cylinder water-cooled diesel engine, model OM 502 LA (EUROMOT2,EPA), with hydrostatically driven fan and thermostatically controlled cooler.
Displacement 971.98 in^3, Rating 517 hp at 1,800 rpm:
Torque 1,770 ft-lbs at I ,200 rpm.

1.4 TRANSMISSION

ZF AS-Tronic, type 16AS2602, with integrated intarder. Electro-pneumatically controlled dry clutch and fully automatic contorl system, 16 forward speeds and 2 reverse gears.
Gear ratios: Forward: 14.12 / 11.68 / 9.54 / 7.89 / 6.52 / 5.39 / 4.57
3.78 / 3.09 / 2.56 / 2.09 / 1.73 / 1.43 / 1.18 / 1.00 / 0.83
Reverse: 13.07 / 10.81

1.5 TRANSFER CASE

Two-step transfer box, type VG3750, with on/off road drive.
Gear ratios: On-road: 0.8
Off-road: 1.836

1.6 DRIVE

10×8 for on-road and off-road: 1st, 2nd, 4th and 5th axle are driven

1.7 AXLES

1st axle : steered, driven with transverse differential lock, reduction : 8.47
2nd axle steered, driven with transverse differential lock, reduction : 8.47
3rd axle : non steered, non driven, lift axle
4th axle : steered, driven with longlitudinal differential lock and transverse differential lock, reduction : 8.47
5th axle : steered, driven with transverse differential lock, reduction : 8.47
All steering knuckle bearings designed for minimum maintenance (yearly inspection).

1.8 SUSPENSION

Hydro-pneumatic, lockable with level adjustment. All axles have longitudinal and transverse trailing arms. With leveling adjustment and locked cylinders, the chassis can be tilted laterally and longitudinally by push buttons in the carrier cab, or from the contorl panel of the outrigger which adjust the stroke of each individualsuspension cylinder.

Cylinder stroke: - 4-5/8" (- 118mm)
+6-3/16" (+ 157mm)

Service brake : Dual circuit compressed air system with air-dryer. ABS(OPTIONAL)
Parking brake : Spring loaded type, acting on 2nd,4th and 5th axles.
Auxiliary brake : Interder,engine exhaust brake and constant throttle engine brake system.

1.10 WHEELS AND TIRES

(10)11.00-25 steel disc wheels with (10)16.00R25 on / off-road profile tires and mud flaps.
Carrier width: 9'10-1/8" (3.0m) with16.00R25 tires
10' 6" (3.2m) with 20.5R25 tires (OPTIONAL)

1.11 STEERING SYSTEM

ZF semi block dual circuit hydraulic steering, Mechanical steering of two front axles with hydraulic booster and a emergency steering pump is flange-mounted to the trasfer box.
Rear axles can also be steered electronically depends on the speed according to the seering angle of the front axles. Rear axles are locked in "centered" position automatically.

1.12 POWER TRAIN

Drive-shafts with cross-geared flanges virtually maintenance-free.

1.13 FUEL TANK CAPACITY

140 gal (530 l) filler cap lockable.

1.14 CARRIER CAB

Two man full width cab of composite structure (steel sheet metal and fiber glass), windshield of laminated safety glass with windshield wiper and washer, sliding side windows of tempered glass. Driver and co-driver seats adjustable and air-suspended with integrated 3 point safety belts and headrests. 2 rear-view mirrors (electrically adjustable), 1 wide angle mirror and additional curb mirror, all mirrors heated, Radio with CD player and connections for wireless. Engine dependent warm-water heater with defroster nozzles for windshield and cab floor.
Cruise control function. Single-key system.
Instrumentation includes speedometer, odometer, tachograph, rpm counter with hour meter, fuel level gauge, warning light fro the engine temperature, gearbox display, colour display indicating further warning signals and operating functions and the compressed air system.
Air conditioner(OPTIONAL)

1.15 ELECTRICAL SYSTEM

24 volt DC system with 100 ampere 3-phase generator, and two 12 volt, 170 Ah batteries.
Front lighting includes 2 main head lights, 2 high beam lights, 2 directional indicators and 2 parking lights.
Rear lighting includes 2 rear combi panels each with directional indicator, parking light, brake light, fog light, reversing light and license plate light.
Side lighting includes 2 front directional indicators and reflectors on carrier.
Other equipment includes hazard warning light system, cab light, instrument panel light, signal horn and amber rotating beacon on cab roof.
Charging plugbox. Back up alarm. 2 front fog lights.
4 lights to illuminate the area of the extended outriggers.
Lighting according to EEC regulations.

1.16 TOOLS AND ACCESSORIES
Special tool set, hazard warning triangle, hazard falshing lamp, fire extinguisher and first aid kit.

1.17 PAINTING
Standard TADANO colors

1.18 DIMENSIONS
Overall width : 9'10-1/8" (3.0m) with16.00R25 tires
10' 6" (3.2m) with 20.5R25 tires
Overall height : 13' 1-1/16" (3.99m)
In travel condition, the overall height can be adjusted - 4-5/8" / + 6-3/16"
Overall length : 50' 5/16" (15.248m)
52' 5-1/16" (15.978m) with Aux. winch
Carrier length : 43' 10-3/16" (13.3645m)
Wheel base : 8' 10-15/16" + 5' 4-15/16" + 8' 1/16" + 5' 6-15/16"
(2.7m + 1.65m + 2.44m + 1.7m)

1.19 CARRIER OPTIONAL EQUIPMENT
1. Air conditioning
2. 20.5R25 on/off road profile tires
3. Spare weel & tire
4. ABS
5. Eddy current brake (retarder)
6. Rear view camara(image in display in carrier cab)
7. Spark arrester
8. Toolbox rear
9. Towing attachment(D-Value 190 kN)
10. Pneumatic and electrical quick disconnect connectors mounted on rear bumper for boom dolly

2. TRAVEL PERFORMANCE (according to DIN 70020)

Max. travel speed : 52.8 mph
Max. gradeability : 61 %

Gear	16.00R25 / 20.5R25 tires, GVW 132,275 lb				
	Travelling speed (mph)			Gradabilities (%)	
	Off-road gear	On -road gear		Off-road gear	On -road gear
1st	1.9	3.7		61	47
2nd	1.9	4.3		47	39
3rd	2.5	5.0		37	31
4th	2.5	6.2		30	25
5th	3.1	7.5		24	20
6th	4.3	9.3		19	16
7th	5.0	11.2		16	14
8th	5.6	13.0		13	11
9th	6.8	16.2		11	9
10th	8.7	19.3		8	7
11th	10.6	23.6		7	6
12th	12.4	28.6		5	4
13th	14.9	34.8		4	3
14th	19.6	42.3		3	3
15th	21.7	49.7		3	2
16th	26.1	52.8		2	1
1st Rev.	1.9	3.7		55	45
2nd Rev.	1.9	4.3		43	36

The gradeability is based on theoretical values and depends on ground conditions and the coefficient of friction.
A minimum speed of 0.6 MPH is in 1st gear(off-road) at 800 rpm.

Connected to carrier by a single race ball bearing slewing ring with external gearing providing 360°continuous rotation.
Central lubrication system for slewing device, boom elevation cylinder and basic bearing.

3. 2 CRANE ENGINE

Mercedes Benz 6 cylinder water-cooled diesel engine, model OM 906 LA(EUROMOT 2,EPA), with 184 hp at 1,800 rpm, 553.17 ft-lbs torque at 1,200 - 1,600 rpm. Stepless control of engine rpm by foot pedal.
Fuel tank capacity : 66.04 gal (250 l)

3. 3 HYDRAULIC SYSTEM

Three circuit diesel hydraulic system with 1 axial piston variable displacement (hydraulically controlled) double pump with cumulative control for telescoping, derricking and hoisting plus I axial piston pump for swing and pilot controls.

3.4 HYDRAULIC CONTROLS

2 joy-stick levers and 4 three-way electrically operated valves for independent simultaneous operation of all crane motions with stepless speed control.

3.5 TELESCOPIC BOOM

Six section box type construction of high tensile, fine grained steel, consisting of 1 base section and 5 telescopic sections. The boom is extended by means of I double acting single stage cylinders with integrated holding valves.
All telescope sections can be extended and retracted fully automatic and locked in the selected working position.
All telescope sections are extendable under partial load.

Total retracted length :	43' 3-11/16" (13.2m)
Total extended length :	196' 10-3/16" (60.0m)
Max. sheave height :	203' 4-15/16" (62.0m)
Telescoping speed out :	400 sec.

3.6 BOOM EXTENSION

Swing around lattice type boom extension 17.72'(5.4m) / 43.31'(13.2m), offsets 0°/ 20°/ 40°with anti-two block system.
4 intermediate sections(19.69' each) to extend to 122.05'(37.2m).

3.7 AUXILIARY LIFTING SHEAVE (SINGLE TOP) (OPTIONAL)

Single sheave mounted to main boom head for single line operation (stowable). Equipped with anti-two block system .

3.8 BOOM HOIST

1 double acting hydraulic cylinder with integral holding valve.

Boom elevation :	-1.5° to +84°
Boom elevation speed :	100 sec. normal speed / 50 sec. high speed (only derricking up)

3.9 MAIN WINCH

Axial piston constant displacement motor, grooved hoist drum, integral planetary gear, automatic hydraulically controlled spring-loaded multiple disc brake and integral free wheeling (no sagging of load by hoisting).
Winch drive assembly connected to open hydraulic system. Wire rope with "Superstop" easy reeving system.
Lower limit switch and drum turn indicator.

Drum diameter :	20.67" (525mm)
Rope diameter :	0.83" (21mm)
Rope length :	1,107' (310m)
Max. line pull 3rd layer :	21,356 lbs. (95 kN)
Max. line speed 4th layer :	426.5 ft/min (130m/min)

drum, integral planetary gear, automatic hydraulically controlled spring-loaded multiple disc brake and integral free wheeling (no sagging of load by hoisting).
Winch drive assembly connected to open hydraulic system. Wire rope with "Superstop" easy reeving system.
Lower limit switch and drum turn indicator.

Drum diameter :	20.67" (525mm)
Rope diameter :	0.83" (21mm)
Rope length :	1,107' (310m)
Max. line pull 3rd layer :	21,356 lbs. (95 kN)
Max. line speed 4th layer :	426.5 ft/min (130m/min)

3.11 SLEWING GEAR

Constant displacement motor with three stage planetary gear, a foot actuated or automatic service brake and a parking brake.
Open hydraulic circuit with free slewing function.
Slewing speed infinitely variable: 0 - 1.5 rpm

3.12 COUNTERWEIGHT

Total 112,435 lbs, divisible, assembled and disassembled by hydraulic cylinders controlled from crane cab.
Tail swing : 15' 11-1/8" (4.855m)
16' 8-1/16" (5.082m) with Aux. winch

3.13 SUPERSTRUCTURE CAB

Spacious comfortable panoramic cab with sliding door, extra-large tinted glass windows, electrical fold-out front window with windshield washer and wiper, fixed cab roof window with armoured glass and washer/wiper, sun visor, cab light, tiltable cockpit with adjustable hydraulically cushioned seat with headrest, signal horn, radio with CD player, and connection for wireless (12 volt).
Engine dependent hot-water heater and engine independent hot water heater with engine pre-heat.
Complete controls and instrumentation plus LCD graphic display for crane operation.
Outrigger controls from superstructure cab and supported forces display.(OPTIONAL)
Air conditioner.(OPTIONAL)

3.14 ELECTRICAL SYSTEM

24 volt system with 30 A 3-phase alternator, two 12 V (110 Ah) batteries, 1 rotating beacon on right-hand side of main winch, 2 working lights on cab front flap, 1 working light on boom base section and 2 side lights on boom head.

3.15 SAFETY DEVICES

Electronic load moment device (AML) with interpolation and automatic overload shut-off, hoist limit switch with shut-off, overload warning and load moment gauge. Anemometer.
Digital display of boom angle, boom length, sheave height, working radius, hook load and further information.
Working area limitaion for lifting height, load radius, boom angle and swing range.
"Lift Adjuster" function, enables the load to be lited without swinging (automatic derricking up,which keeps the working radius constant.)
Safety valves against pipe and hose rupture, holding valves on hydraulic cylinders.

3.16 SUPERSTRUCTURE OPTIONAL EQUIPMENT

1. Air conditioning
2. 11 ton headache ball
3. 27.5 ton, 1 sheave single hook block
4. 69.4 ton, 3 sheave ram's horn hook block
5. 88.0 ton, 5 sheave ram's horn hook block
6. 138.0 ton, 7 sheave ram's horn hook block
7. 176.5 ton, 9 sheave ram's horn hook block
8. 200.0 ton, 11 sheave ram's horn hook block
9. Additional pulleys for lifting loads of more than 121 ton
10. Auxiliary winch
11. Auxiliary lifting sheave
12. 19.69' intermediate sections for boom extension (1 to 4 sections)
13. Spark arrester
14. Aircraft warning lamp
15. Outrigger load display with monitoring (in superstructure cab and in outrigger control panels)
16. Additional Hydraulic oil cooler
17. Working area limitation(Slew limit)
18. 360° positive swing lock (NYC requirement).

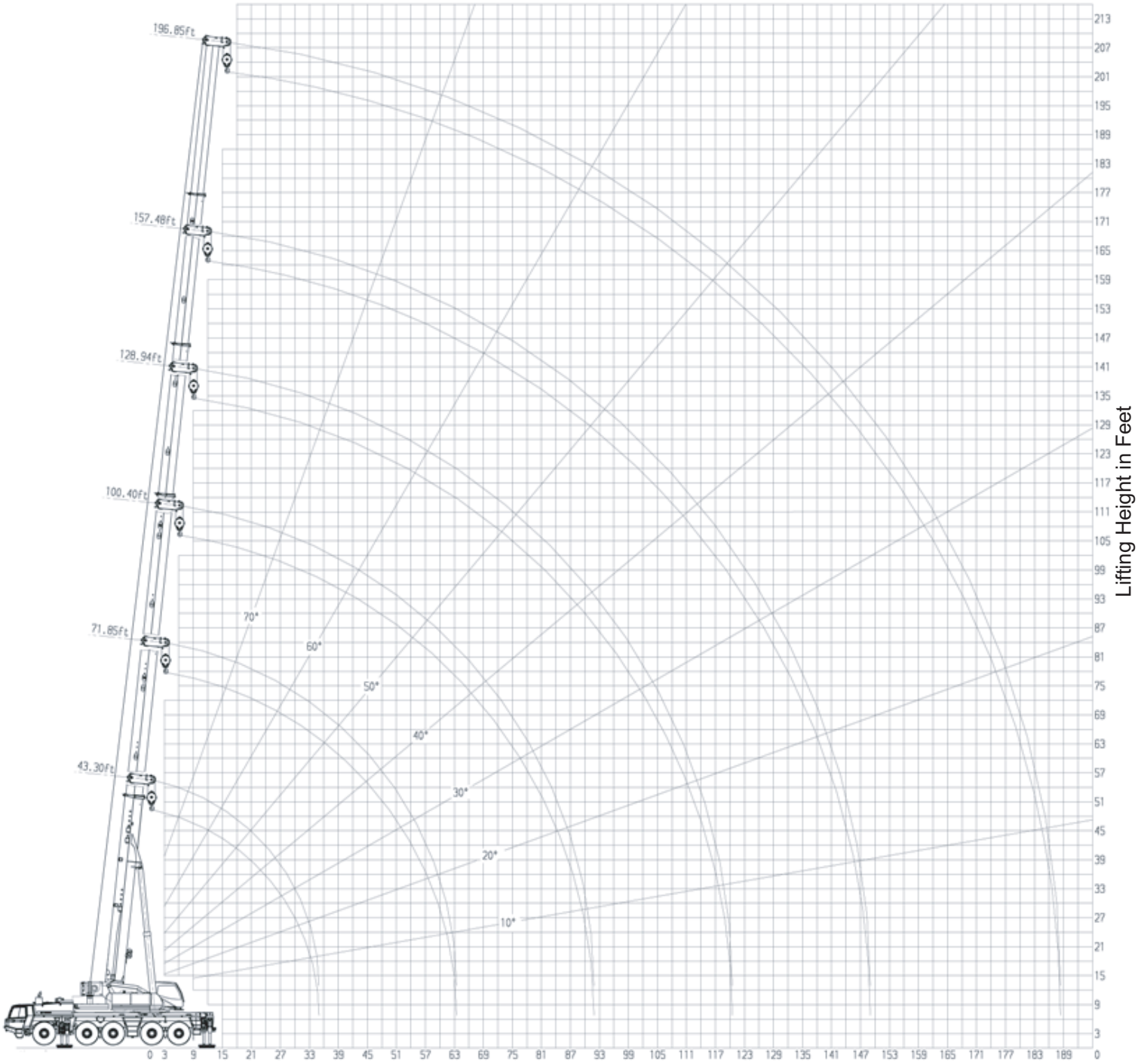

NOTE: Boom and jib geometry shown are for unloaded condition and machine standing level on firm supporting surface. Boom deflection and subsequent radius and boom angle change must be accounted for when applying load to hook.

On outriggers, 360° working area
Outrigger base 27.23 ft

Boom length (ft)

Work. Radius (ft)	43.3			57.7		57.7		71.9		71.9		71.9		71.9		83.3		86.3		86.3		100.4		100.4		100.4		114.8		114.8		114.8		Work. Radius (ft)
	° ∠	1)		° ∠		° ∠		° ∠		° ∠		° ∠		° ∠		° ∠		° ∠		° ∠		° ∠		° ∠		° ∠		° ∠		° ∠		° ∠		
9	71	400.0*																																9
10	70	350.5*	307.5*	76	117.0	76	264.5*	79	85.5	79	120.5	79	255.0*	79	223.0	81	88.9	81	116.5	81	196.5													10
12	67	322.5*	279.0*	73	110.0	73	264.5*	77	79.7	77	118.5	77	255.0*	77	223.0	80	83.6	80	116.5	80	196.5	82	73.0	82	109.5	82	162.5							12
14	64	294.5*	254.5*	71	104.0	71	255.0*	75	74.6	75	113.0	75	250.0*	75	222.0	78	78.9	78	116.5	78	196.5	80	68.1	80	109.5	80	156.0							14
16	61	270.0*	228.5	69	98.5	69	229.0	73	69.9	73	107.5	73	228.5	73	212.5	77	74.3	77	113.5	77	196.5	79	63.7	79	109.5	79	145.5	81	65.0	81	99.5	81	121.5	16
18	58	243.0	209.5	67	93.7	67	210.0	72	65.9	72	102.5	72	209.5	72	200.5	76	70.2	76	109.0	76	196.5	78	60.0	78	109.5	78	136.5	80	61.5	80	99.5	80	119.5	18
20	54	216.5	193.5	65	89.1	65	194.0	71	62.1	71	98.3	71	193.0	71	189.0	74	66.2	74	104.5	74	194.0	77	56.6	77	109.5	77	128.0	79	58.2	79	99.5	79	117.0	20
25	45	168.5	161.0	59	79.7	59	161.5	66	54.6	66	87.4	66	161.0	66	164.5	71	58.1	71	95.2	71	163.5	74	49.4	74	100.0	74	111.0	76	51.6	76	99.5	76	102.0	25
30	32	134.5	134.5	52	72.1	52	136.5	62	48.5	62	77.7	62	135.5	62	138.0	67	51.5	67	86.1	67	136.5	71	43.8	71	92.3	71	97.5	74	46.1	74	99.5	74	89.8	30
35				45	66.2	45	115.0	56	43.7	56	70.2	56	114.5	56	117.0	63	46.2	63	78.1	63	115.5	68	39.2	68	84.7	68	87.1	71	41.7	71	88.8	71	80.3	35
40				37	61.3	37	99.8	51	39.7	51	63.7	51	98.7	51	101.0	59	41.9	59	71.1	59	99.8	65	35.5	65	77.7	65	78.0	69	38.0	69	82.2	69	72.1	40
45				26	57.9	26	87.4	45	36.5	45	58.5	45	86.3	45	88.5	55	38.4	55	65.1	55	87.4	62	32.3	62	71.9	62	70.8	66	35.0	66	76.5	66	65.6	45
50								39	33.9	39	54.1	39	76.6	39	79.4	50	35.4	50	60.0	50	78.0	58	29.7	58	66.7	58	64.7	63	32.3	63	71.4	63	60.0	50
55								31	31.6	31	50.4	31	67.3	31	70.3	46	32.8	46	55.6	46	68.8	54	27.4	54	62.0	54	59.3	59	30.0	59	67.6	59	55.1	55
60								22	29.6	22	47.2	22	57.7	22	60.5	41	30.5	41	51.8	41	59.7	50	25.5	50	58.3	50	54.6	56	27.9	56	63.8	56	50.9	60
65																35	28.7	35	48.5	35	52.5	46	23.8	46	56.4	46	50.5	53	26.2	53	56.3	53	47.0	65
70																27	27.1	27	45.9	27	46.6	42	22.3	42	51.7	42	45.2	50	24.7	50	50.3	50	45.0	70
75																20	25.6	20	43.3	20	40.9	37	20.9	37	46.7	37	40.1	47	23.3	47	45.2	47	41.8	75
80																						31	19.8	31	42.2	31	35.7	43	22.0	43	40.7	43	37.6	80
85																						24	18.8	24	38.4	24	32.0	39	20.8	39	36.8	39	33.7	85
90																						18	17.8	18	34.5	18	28.3	34	19.9	34	33.6	34	30.5	90
95																												29	19.1	29	30.7	29	27.6	95
100																												23	18.3	23	28.0	23	24.9	100
110																																		110
120																																		120
130																																		130
140																																		140
150																																		150
Telescoping sequence %																																		
Tel. 1	0			0		0		0		0		46		0		0		0		46		0		0		93		0		46		93		Tel. 1
Tel. 2	0			0		46		0		0		46		46		0		0		46		0		46		46		0		46		46		Tel. 2
Tel. 3	0			0		0		0		0		0		46		0		46		46		0		46		46		46		46		46		Tel. 3
Tel. 4	0			0		0		0		46		0		0		46		46		0		93		46		0		93		46		46		Tel. 4
Tel. 5	0			46		0		93		46		0		0		93		46		0		93		46		0		93		46		0		Tel. 5

1) Over rear with superstructure pin engaged
*With additional lifting equipment.
Operation and maintenance of this machine must be in compliance with the information provided in the "Operation and Maintenance Manual" supplied with this machine.

Counterweight 81,570 lbs

Lifting capacities in 1,000 lbs according per SAE J765 on telescopic boom
On outriggers, 360° working area
Outrigger base 27.23 ft

Boom length (ft)

Work. Radius (ft)	43.3			57.7		57.7		71.9		71.9		71.9		71.9		83.3		86.3		86.3		100.4		100.4		100.4		114.8		114.8		114.8		Work. Radius (ft)
	° ∠	1)		° ∠		° ∠		° ∠		° ∠		° ∠		° ∠		° ∠		° ∠		° ∠		° ∠		° ∠		° ∠		° ∠		° ∠		° ∠		
9	71	400.0*																																9
10	70	350.5*	306.0*	76	117.0	76	264.5*	79	85.5	79	120.5	79	255.0*	79	223.0	81	88.9	81	116.5	81	196.5													10
12	67	318.0*	277.5*	73	110.0	73	264.5*	77	79.7	77	118.5	77	255.0*	77	223.0	80	83.6	80	116.5	80	196.5	82	73.0	82	109.5	82	162.5							12
14	64	279.0*	252.0*	71	104.0	71	253.5*	75	74.6	75	112.5	75	249.5*	75	222.0	78	78.9	78	116.5	78	196.5	80	68.1	80	109.5	80	156.0							14
16	61	247.0*	226.5	69	98.5	69	227.0	73	69.9	73	107.5	73	226.0	73	212.5	77	74.3	77	113.5	77	196.5	79	63.7	79	109.5	79	145.5	81	65.0	81	99.5	81	121.5	16
18	58	220.5	210.0	67	93.7	67	210.0	72	65.9	72	102.5	72	208.5	72	200.5	76	70.2	76	109.0	76	196.5	78	60.0	78	109.5	78	136.5	80	61.5	80	99.5	80	119.5	18
20	54	197.0	195.5	65	89.1	65	195.0	71	62.1	71	98.3	71	194.5	71	188.5	74	66.2	74	104.5	74	194.0	77	56.6	77	109.5	77	128.0	79	58.2	79	99.5	79	117.0	20
25	45	156.5	156.0	59	79.7	59	156.5	66	54.6	66	87.4	66	155.0	66	157.5	71	58.1	71	95.2	71	156.0	74	49.4	74	100.0	74	111.0	76	51.6	76	99.5	76	102.0	25
30	32	128.0	128.0	52	72.1	52	128.0	62	48.5	62	77.7	62	127.0	62	129.5	67	51.5	67	86.1	67	128.0	71	43.8	71	92.3	71	97.5	74	46.1	74	99.5	74	89.8	30
35				45	66.2	45	107.5	56	43.7	56	70.2	56	106.0	56	109.5	63	46.2	63	78.1	63	108.0	68	39.2	68	84.7	68	87.1	71	41.7	71	88.8	71	80.3	35
40				37	61.3	37	93.0	51	39.7	51	63.7	51	86.7	51	90.3	59	41.9	59	71.1	59	88.6	65	35.5	65	77.7	65	78.0	69	38.0	69	82.2	69	72.1	40
45				26	57.9	26	76.7	45	36.5	45	58.5	45	74.6	45	77.7	55	38.4	55	65.1	55	76.2	62	32.3	62	71.9	62	70.8	66	35.0	66	76.5	66	65.6	45
50								39	33.9	39	54.1	39	63.2	39	66.4	50	35.4	50	60.0	50	64.8	58	29.7	58	66.7	58	62.2	63	32.3	63	68.2	63	60.0	50
55								31	31.6	31	50.4	31	53.6	31	56.7	46	32.8	46	55.6	46	55.2	54	27.4	54	60.4	54	53.8	59	30.0	59	59.5	59	54.2	55
60								22	29.6	22	47.2	22	45.7	22	48.5	41	30.5	41	51.6	41	47.4	50	25.5	50	53.2	50	46.2	56	27.9	56	51.5	56	48.0	60
65																35	28.7	35	47.3	35	41.3	46	23.8	46	46.9	46	40.0	53	26.2	53	45.3	53	41.8	65
70																27	27.1	27	42.3	27	36.3	42	22.3	42	41.7	42	35.0	50	24.7	50	40.1	50	36.7	70
75																20	25.6	20	37.3	20	31.4	37	20.9	37	37.2	37	30.5	47	23.3	47	35.6	47	32.4	75
80																						31	19.8	31	33.4	31	26.5	43	22.0	43	31.8	43	28.7	80
85																						24	18.8	24	30.2	24	23.3	39	20.8	39	28.6	39	25.1	85
90																						18	17.8	18	27.0	18	20.1	34	19.9	34	25.9	34	22.4	90
95																												29	19.1	29	23.4	29	19.9	95
100																												23	18.3	23	21.1	23	17.6	100
110																																		110
120																																		120
130																																		130
140																																		140
150																																		150
Telescoping sequence %																																		
Tel. 1	0			0		0		0		0		46		0		0		0		46		0		0		93		0		46		93		Tel. 1
Tel. 2	0			0		46		0		0		46		46		0		0		46		0		46		46		0		46		46		Tel. 2
Tel. 3	0			0		0		0		0		0		46		0		46		46		0		46		46		46		46		46		Tel. 3
Tel. 4	0			0		0		0		46		0		0		46		46		0		93		46		0		93		46		46		Tel. 4
Tel. 5	0			46		0		93		46		0		0		93		46		0		93		46		0		93		46		0		Tel. 5

1) Over rear with superstructure pin engaged
*With additional lifting equipment.
Operation and maintenance of this machine must be in compliance with the information provided in the "Operation and Maintenance Manual" supplied with this machine.

On outriggers, 360° working area
Outrigger base 27.23 ft

Boom length (ft)

Work. Radius (ft)	128.9 ° ∠		128.9 ° ∠		128.9 ° ∠		143.4 ° ∠		143.4 ° ∠		143.3 ° ∠		157.5 ° ∠		157.5 ° ∠		157.5 ° ∠		171.9 ° ∠		171.9 ° ∠		186.0 ° ∠		196.9 ° ∠		Work. Radius (ft)
9																											9
10																											10
12																											12
14																											14
16																											16
18																											18
20	81	57.2	81	91.3	81	71.0	82	49.4	82	54.0	82	73.6															20
25	78	51.6	78	91.3	78	68.0	80	49.4	80	53.7	80	73.6	81	43.0	81	59.3	81	49.2									25
30	76	45.9	76	83.8	76	61.9	78	47.2	78	50.1	78	73.3	80	43.0	80	59.3	80	49.2	81	38.8	81	47.6	82	37.5			30
35	74	41.4	74	75.3	74	56.8	76	42.8	76	45.9	76	68.3	78	42.0	78	58.0	78	48.1	79	38.8	79	47.0	80	37.5	81	30.9	35
40	72	37.5	72	68.0	72	52.4	74	39.1	74	42.2	74	61.7	76	39.5	76	54.9	76	45.9	78	38.6	78	45.7	79	37.4	80	30.9	40
45	69	34.1	69	62.0	69	48.6	71	36.1	71	39.1	71	56.5	74	36.7	74	51.2	74	42.7	75	36.9	75	42.9	77	36.3	78	30.9	45
50	66	31.3	66	56.7	66	45.4	69	33.3	69	36.5	69	51.9	72	34.1	72	47.9	72	39.8	74	34.7	74	40.1	76	34.4	77	30.9	50
55	64	28.9	64	52.2	64	42.5	67	30.9	67	34.2	67	47.8	70	31.8	70	44.6	70	37.2	72	32.5	72	37.7	74	32.4	75	30.0	55
60	61	26.8	61	48.3	61	39.9	65	28.8	65	32.1	65	44.2	68	29.9	68	41.3	68	34.9	71	30.5	71	35.6	73	30.5	74	28.4	60
65	58	24.9	58	44.7	58	37.7	62	26.9	62	30.2	62	41.0	66	28.0	66	38.5	66	32.9	68	28.9	68	33.5	70	28.9	72	27.1	65
70	56	23.4	56	41.8	56	35.9	60	25.2	60	28.5	60	38.2	64	26.5	64	35.9	64	31.2	67	27.3	67	31.8	69	27.5	71	25.7	70
75	53	21.9	53	40.4	53	34.1	58	23.7	58	27.0	58	35.7	62	24.9	62	33.6	62	29.6	65	25.9	65	30.2	67	26.1	69	24.5	75
80	50	20.4	50	39.2	50	32.5	55	22.4	55	25.7	55	33.4	59	23.5	59	31.5	59	28.1	63	24.6	63	28.8	66	24.9	68	23.3	80
85	47	19.3	47	35.5	47	31.0	53	21.2	53	24.5	53	31.4	57	22.3	57	29.4	57	26.5	61	23.4	61	27.4	64	23.9	66	21.9	85
90	43	18.2	43	32.3	43	29.6	50	20.1	50	23.4	50	30.0	55	21.3	55	27.7	55	25.4	59	22.3	59	26.2	62	22.7	65	20.4	90
95	40	17.3	40	29.4	40	28.5	47	19.1	47	22.4	47	28.5	53	20.3	53	26.2	53	24.3	57	21.3	57	25.1	60	21.7	63	19.1	95
100	36	16.5	36	26.8	36	27.5	44	18.3	44	21.6	44	26.6	50	19.4	50	24.8	50	23.3	54	20.4	54	23.8	58	20.9	61	17.9	100
110	27	15.0	27	22.3	27	25.1	38	16.6	38	19.9	38	22.2	45	17.7	45	22.1	45	21.4	50	18.7	50	21.6	54	19.2	57	15.7	110
120							29	15.2	29	18.5	29	18.5	39	16.3	39	19.0	39	19.9	45	17.4	45	19.8	50	17.9	53	14.0	120
130							18	14.2	18	17.7	18	15.4	32	15.2	32	15.8	32	17.9	40	16.2	40	16.9	46	16.5	50	12.2	130
140													23	13.8	23	13.4	23	15.4	34	15.1	34	14.2	41	14.9	45	10.7	140
150																			27	14.0	27	11.9	36	13.0	40	9.4	150
160																			16	12.1	16	9.9	29	11.0	35	8.3	160
170																							21	9.3	29	7.1	170
180																									21	6.1	180
190																											190
Telescoping sequence %																											
Tel. 1	0		93		46		0		46		93		0		93		46		46		93		93		100		Tel. 1
Tel. 2	0		46		46		46		46		93		93		93		93		93		93		93		100		Tel. 2
Tel. 3	93		46		46		93		46		46		93		93		93		93		93		93		100		Tel. 3
Tel. 4	93		46		46		93		93		46		93		46		93		93		93		93		100		Tel. 4
Tel. 5	93		46		93		93		93		46		93		46		46		93		46		93		100		Tel. 5

Operation and maintenance of this machine must be in compliance with the information provided in the "Operation and Maintenance Manual" supplied with this machine.

Counterweight 81,570 lbs

Lifting capacities in 1,000 lbs according per SAE J765 on telescopic boom
On outriggers, 360° working area
Outrigger base 27.23 ft

Boom length (ft)

Work. Radius (ft)	128.9 ° ∠		128.9 ° ∠		128.9 ° ∠		143.4 ° ∠		143.4 ° ∠		143.3 ° ∠		157.5 ° ∠		157.5 ° ∠		157.5 ° ∠		171.9 ° ∠		171.9 ° ∠		186.0 ° ∠		196.9 ° ∠		Work. Radius (ft)
9																											9
10																											10
12																											12
14																											14
16																											16
18																											18
20	81	57.2	81	91.3	81	71.0	82	49.4	82	54.0	82	73.6															20
25	78	51.6	78	91.3	78	68.0	80	49.4	80	53.7	80	73.6	81	43.0	81	59.3	81	49.2									25
30	76	45.9	76	83.8	76	61.9	78	47.2	78	50.1	78	73.3	80	43.0	80	59.3	80	49.2	81	38.8	81	47.6	82	37.5			30
35	74	41.4	74	75.3	74	56.8	76	42.8	76	45.9	76	68.3	78	42.0	78	58.0	78	48.1	79	38.8	79	47.0	80	37.5	81	30.9	35
40	72	37.5	72	68.0	72	52.4	74	39.1	74	42.2	74	61.7	76	39.5	76	54.9	76	45.9	78	38.6	78	45.7	79	37.4	80	30.9	40
45	69	34.1	69	62.0	69	48.6	71	36.1	71	39.1	71	56.5	74	36.7	74	51.2	74	42.7	75	36.9	75	42.9	77	36.3	78	30.9	45
50	66	31.3	66	56.7	66	45.4	69	33.3	69	36.5	69	51.9	72	34.1	72	47.9	72	39.8	74	34.7	74	40.1	76	34.4	77	30.9	50
55	64	28.9	64	52.2	64	42.5	67	30.9	67	34.2	67	47.8	70	31.8	70	44.6	70	37.2	72	32.5	72	37.7	74	32.4	75	30.0	55
60	61	26.8	61	48.1	61	39.9	65	28.8	65	32.1	65	44.2	68	29.9	68	41.3	68	34.9	71	30.5	71	35.6	73	30.5	74	28.4	60
65	58	24.9	58	43.7	58	37.7	62	26.9	62	30.2	62	41.0	66	28.0	66	38.5	66	32.9	68	28.9	68	33.5	70	28.9	72	27.1	65
70	56	23.4	56	38.8	56	35.9	60	25.2	60	28.5	60	37.9	64	26.5	64	35.9	64	31.2	67	27.3	67	31.8	69	27.5	71	25.7	70
75	53	21.9	53	34.3	53	34.1	58	23.7	58	27.0	58	34.3	62	24.9	62	33.5	62	29.6	65	25.9	65	30.2	67	26.1	69	24.5	75
80	50	20.4	50	30.5	50	32.3	55	22.4	55	25.7	55	30.5	59	23.5	59	30.9	59	28.1	63	24.6	63	28.8	66	24.9	68	23.3	80
85	47	19.3	47	27.3	47	29.9	53	21.2	53	24.5	53	27.1	57	22.3	57	27.8	57	26.5	61	23.4	61	27.4	64	23.9	66	21.9	85
90	43	18.2	43	24.4	43	27.2	50	20.1	50	23.4	50	24.4	55	21.3	55	24.9	55	25.4	59	22.3	59	25.4	62	22.7	65	20.4	90
95	40	17.3	40	21.8	40	24.8	47	19.1	47	22.4	47	21.8	53	20.3	53	22.3	53	23.9	57	21.3	57	23.2	60	21.6	63	19.1	95
100	36	16.5	36	19.4	36	22.6	44	18.3	44	21.6	44	19.4	50	19.4	50	20.0	50	22.0	54	20.4	54	20.9	58	20.6	61	17.9	100
110	27	15.0	27	15.6	27	18.9	38	16.6	38	19.4	38	15.5	45	17.7	45	16.0	45	18.2	50	18.6	50	16.9	54	17.9	57	15.7	110
120							29	15.2	29	16.4	29	12.3	39	16.2	39	12.9	39	14.9	45	16.0	45	13.8	50	14.8	53	14.0	120
130							18	14.2	18	13.7	18	9.8	32	14.4	32	10.3	32	12.4	40	13.3	40	11.3	46	12.2	50	12.2	130
140													23	12.1	23	8.2	23	10.1	34	11.2	34	9.0	41	10.0	45	10.0	140
150																			27	9.4	27	7.0	36	8.1	40	8.1	150
160																			16	7.4	16	5.3	29	6.4	35	6.7	160
170																							21	5.1	29	5.2	170
180																									21	3.8	180
190																											190
Telescoping sequence %																											
Tel. 1	0		93		46		0		46		93		0		93		46		46		93		93		100		Tel. 1
Tel. 2	0		46		46		46		46		93		93		93		93		93		93		93		100		Tel. 2
Tel. 3	93		46		46		93		46		46		93		93		93		93		93		93		100		Tel. 3

On outriggers, 360° working area
Outrigger base 27.23 ft

Boom length (ft)

Work. Radius (ft)	43.3 ∠° 1)			57.7 ∠°		57.7 ∠°		71.9 ∠°		71.9 ∠°		71.9 ∠°		83.3 ∠°		86.3 ∠°		86.3 ∠°		100.4 ∠°		100.4 ∠°		100.4 ∠°		114.8 ∠°		114.8 ∠°		114.8 ∠°		Work. Radius (ft)
9	71	400.0*																														9
10	70	350.5*	306.0*	76	117.0	76	264.5*	79	85.5	79	120.5	79	255.0*	79	223.0	81	88.9	81	116.5	81	196.5													10
12	67	315.5*	277.5*	73	110.0	73	264.5*	77	79.7	77	118.5	77	255.0*	77	223.0	80	83.6	80	116.5	80	196.5	82	73.0	82	109.5	82	162.5							12
14	64	267.0*	256.5*	71	104.0	71	258.0*	75	74.6	75	112.5	75	252.5*	75	222.0	78	78.9	78	116.5	78	196.5	80	68.1	80	109.5	80	156.0							14
16	61	233.5	233.0	69	98.5	69	233.5	73	69.9	73	107.5	73	231.5	73	212.5	77	74.3	77	113.5	77	196.5	79	63.7	79	109.5	79	145.5	81	65.0	81	99.5	81	121.5	16
18	58	208.5	208.5	67	93.7	67	208.5	72	65.9	72	102.5	72	207.0	72	200.5	76	70.2	76	109.0	76	192.5	78	60.0	78	109.5	78	136.5	80	61.5	80	99.5	80	119.5	18
20	54	186.5	186.5	65	89.1	65	186.0	71	62.1	71	98.3	71	184.5	71	187.0	74	66.2	74	104.5	74	185.5	77	56.6	77	109.0	77	128.0	79	58.2	79	99.5	79	117.0	20
25	45	148.0	148.0	59	79.7	59	147.5	66	54.6	66	87.4	66	146.0	66	148.5	71	58.1	71	95.2	71	147.0	74	49.4	74	100.0	74	111.0	76	51.6	76	99.5	76	102.0	25
30	32	120.0	120.4	52	72.1	52	120.0	62	48.5	62	77.7	62	118.0	62	122.0	67	51.5	67	86.1	67	117.5	71	43.8	71	92.3	71	97.5	74	46.1	74	99.5	74	89.8	30
35				45	66.2	45	93.8	56	43.7	56	70.2	56	92.2	56	96.0	63	46.2	63	78.1	63	91.5	68	39.2	68	84.7	68	85.2	71	41.7	71	88.8	71	80.3	35
40				37	61.3	37	74.8	51	39.7	51	63.7	51	73.2	51	77.0	59	41.9	59	71.0	59	75.2	65	35.5	65	77.2	65	69.5	69	38.0	69	76.3	69	71.7	40
45				26	57.9	26	61.2	45	36.5	45	58.5	45	59.6	45	63.2	55	38.4	55	64.1	55	61.6	62	32.3	62	67.1	62	59.2	66	35.0	66	65.7	66	61.4	45
50								39	33.9	39	53.0	39	49.3	39	52.7	50	35.4	50	56.8	50	51.2	58	29.7	58	57.2	58	49.5	63	32.3	63	55.6	63	51.6	50
55								31	31.6	31	47.6	31	41.1	31	44.2	46	32.8	46	49.5	46	42.8	54	27.4	54	48.7	54	41.3	59	30.0	59	47.1	59	43.2	55
60								22	29.6	22	42.2	22	34.2	22	37.0	41	30.5	41	42.6	41	36.1	50	25.5	50	41.9	50	34.7	56	27.9	56	40.2	56	36.5	60
65																35	28.7	35	37.1	35	30.8	46	23.8	46	36.4	46	29.3	53	26.2	53	35.0	53	31.3	65
70																27	27.1	27	32.7	27	26.4	42	22.3	42	32.2	42	25.0	50	24.7	50	30.7	50	27.0	70
75																20	25.6	20	28.5	20	22.0	37	20.9	37	28.5	37	21.3	47	23.3	47	27.0	47	23.2	75
80																						31	19.8	31	25.3	31	18.0	43	22.0	43	23.8	43	20.0	80
85																						24	18.8	24	22.4	24	15.2	39	20.8	39	20.9	39	17.1	85
90																						18	17.8	18	19.6	18	12.3	34	19.9	34	18.4	34	14.8	90
95																												29	19.1	29	16.3	29	12.7	95
100																												23	18.3	23	14.4	23	10.9	100
110																																		110
120																																		120
130																																		130
140																																		140
150																																		150
Telescoping sequence %																																		
Tel. 1	0			0		0		0		0		46		0		0		46		0		0		93		0		46		93		Tel. 1
Tel. 2	0			0		46		0		0		46		46		0		0		46		0		46		46		0		46		Tel. 2
Tel. 3	0			0		0		0		0		0		46		0		46		46		0		46		46		46		46		Tel. 3
Tel. 4	0			0		0		0		46		0		0		46		46		0		93		46		0		93		46		Tel. 4
Tel. 5	0			46		0		93		46		0		0		93		46		0		93		46		0		93		46		0	Tel. 5

1) Over rear with superstructure pin engaged
*With additional lifting equipment.
Operation and maintenance of this machine must be in compliance with the information provided in the "Operation and Maintenance Manual" supplied with this machine

Counterweight 28,660 lbs

Lifting capacities in 1,000 lbs according per SAE J765 on telescopic boom
On outriggers, 360° working area
Outrigger base 27.23 ft

Boom length (ft)

Work. Radius (ft)	43.3 ∠° 1)			57.7 ∠°		57.7 ∠°		71.9 ∠°		71.9 ∠°		71.9 ∠°		83.3 ∠°		86.3 ∠°		86.3 ∠°		100.4 ∠°		100.4 ∠°		100.4 ∠°		114.8 ∠°		114.8 ∠°		114.8 ∠°		Work. Radius (ft)
9	71	400.0*																														9
10	70	348.0*	306.0*	76	117.0	76	264.5*	79	85.5	79	120.5	79	255.0*	79	223.0	81	88.9	81	116.5	81	196.5													10
12	67	293.5*	276.5*	73	110.0	73	264.5*	77	79.7	77	118.5	77	255.0*	77	223.0	80	83.6	80	116.5	80	196.5	82	73.0	82	109.5	82	162.5							12
14	64	252.0*	249.0*	71	104.0	71	250.0*	75	74.6	75	113.0	75	245.0*	75	222.0	78	78.9	78	116.5	78	196.5	80	68.1	80	109.5	80	156.0							14
16	61	220.0	220.0	69	98.5	69	220.0	73	69.9	73	107.5	73	218.5	73	212.5	77	74.3	77	113.5	77	196.5	79	63.7	79	109.5	79	145.5	81	65.0	81	99.5	81	121.5	16
18	58	196.5	196.5	67	93.7	67	196.0	72	65.9	72	102.5	72	195.0	72	195.0	76	70.2	76	109.0	76	187.0	78	60.0	78	109.5	78	136.5	80	61.5	80	99.5	80	119.5	18
20	54	175.5	175.5	65	89.1	65	175.0	71	62.1	71	98.3	71	173.5	71	176.5	74	66.2	74	104.5	74	174.0	77	56.6	77	109.0	77	128.0	79	58.2	79	99.5	79	117.0	20
25	45	134.5	134.5	59	79.7	59	134.0	66	54.6	66	87.4	66	128.5	66	132.5	71	58.1	71	95.2	71	128.0	74	49.4	74	100.0	74	111.0	76	51.6	76	99.5	76	102.0	25
30	32	96.0	96.0	52	72.1	52	95.8	62	48.5	62	77.7	62	94.0	62	98.2	67	51.5	67	86.1	67	96.4	71	43.8	71	91.8	71	89.0	74	46.1	74	94.5	74	89.1	30
35				45	66.2	45	71.2	56	43.7	56	70.2	56	69.4	56	73.5	63	46.2	63	74.9	63	71.6	68	39.2	68	77.9	68	65.5	71	41.7	71	77.1	71	71.5	35
40				37	57.1	37	55.2	51	39.7	51	59.9	51	53.5	51	57.4	59	41.9	59	60.4	59	55.7	65	35.5	65	62.7	65	50.3	69	38.0	69	60.7	69	56.3	40
45				26	48.2	26	43.8	45	36.5	45	50.9	45	42.2	45	45.8	55	38.4	55	51.3	55	44.2	62	32.3	62	50.9	62	41.9	66	35.0	66	49.1	66	44.9	45
50								39	33.9	39	42.6	39	34.1	39	37.4	50	35.4	50	43.0	50	36.0	58	29.7	58	42.3	58	34.3	63	32.3	63	40.5	63	36.6	50
55								31	31.6	31	35.8	31	27.5	31	30.8	46	32.8	46	36.2	46	29.3	54	27.4	54	35.5	54	27.8	59	30.0	59	33.8	59	30.1	55
60								22	29.6	22	30.3	22	21.6	22	25.4	41	30.4	41	30.9	41	23.9	50	25.5	50	30.1	50	22.3	56	27.9	56	28.5	56	24.7	60
65																35	27.9	35	26.6	35	19.7	46	23.8	46	25.9	46	18.0	53	26.2	53	24.3	53	20.2	65
70																27	24.8	27	23.1	27	16.2	42	22.3	42	22.4	42	14.5	50	24.4	50	20.7	50	16.7	70
75																20	21.6	20	19.7	20	12.9	37	20.6	37	19.3	37	11.6	47	22.3	47	17.6	47	13.8	75
80																						31	18.8	31	16.6	31	9.1	43	19.9	43	14.9	43	11.4	80
85																						24	17.3	24	14.5	24	7.0	39	17.6	39	12.7	39	9.2	85
90																						18	15.8	18	12.3	18	4.8	34	15.7	34	10.8	34	7.3	90
95																												29	13.9	29	9.2	29	5.7	95
100																												23	12.3	23	7.7	23	4.2	100
110																																		110
120																																		120
130																																		130
140																																		140
150																																		150
Telescoping sequence %																																		
Tel. 1	0			0		0		0		0		46		0		0		46		0		0		93		0		46		93		Tel. 1
Tel. 2	0			0		46		0		0		46		46		0		0		46		0		46		46		0		46		Tel. 2
Tel. 3	0			0		0		0		0		0		46		0		46		46		0		46		46		46		46		Tel. 3
Tel. 4	0			0		0		0		46		0		0		46		46		0		93		46		0		93		46		Tel. 4
Tel. 5	0			46		0		93		46		0		0		93		46		0		93		46		0		93		46		0	Tel. 5

1) Over rear with superstructure pin engaged
*With additional lifting equipment.
Operation and maintenance of this machine must be in compliance with the information provided in the "Operation and Maintenance Manual" supplied with this machine

Lifting capacities in 1,000 lbs according per SAE J765 on telescopic boom
On outriggers, 360° working area
Outrigger base 27.23 ft

Work. Radius (ft)	Boom length (ft)																								Work. Radius (ft)
	128.9 ∠°		128.9 ∠°		128.9 ∠°		143.4 ∠°		143.4 ∠°		143.3 ∠°		157.5 ∠°		157.5 ∠°		157.5 ∠°		171.9 ∠°		171.9 ∠°		186.0 ∠°		196.9 ∠°		
9																											9
10																											10
12																											12
14																											14
16																											16
18																											18
20	81	57.2	81	91.3	81	71.0	82	49.4	82	54.0	82	73.6															20
25	78	51.6	78	91.3	78	68.0	80	49.4	80	53.7	80	73.6	81	43.0	81	59.3	81	49.2									25
30	76	45.9	76	83.8	76	61.9	78	47.2	78	50.1	78	73.3	80	43.0	80	59.3	80	49.2	81	38.8	81	47.6	82	37.5			30
35	74	41.4	74	75.3	74	56.8	76	42.8	76	45.9	76	68.3	78	42.0	78	58.0	78	48.1	79	38.8	79	47.0	80	37.5	81	30.9	35
40	72	37.5	72	67.8	72	52.4	74	39.1	74	42.2	74	61.7	76	39.5	76	54.9	76	45.9	78	38.6	78	45.7	79	37.4	80	30.9	40
45	69	34.1	69	59.7	69	48.6	71	36.1	71	39.1	71	56.5	74	36.7	74	51.2	74	42.7	75	36.9	75	42.9	77	36.3	78	30.9	45
50	66	31.3	66	51.8	66	45.4	69	33.3	69	36.5	69	49.4	72	34.1	72	47.9	72	39.8	74	34.7	74	40.1	76	34.4	77	30.9	50
55	64	28.9	64	44.7	64	42.4	67	30.9	67	34.2	67	42.8	70	31.8	70	42.8	70	37.2	72	32.5	72	37.7	74	32.4	75	30.0	55
60	61	26.8	61	38.7	61	39.5	65	28.8	65	32.1	65	37.3	68	29.9	68	36.3	68	34.9	71	30.5	71	35.4	73	30.5	74	28.4	60
65	58	24.9	58	33.3	58	36.1	62	26.9	62	30.2	62	33.1	66	28.0	66	31.1	66	32.9	68	28.9	68	32.3	70	28.9	72	27.1	65
70	56	23.4	56	29.1	56	32.2	60	25.2	60	28.5	60	28.9	64	26.5	64	27.8	64	29.1	67	27.3	67	29.0	69	27.5	71	25.7	70
75	53	21.9	53	25.3	53	28.5	58	23..7	58	26.7	58	25.1	62	24.9	62	24.7	62	26.0	65	25.6	65	25.9	67	25.3	69	24.3	75
80	50	20.4	50	22.0	50	25.3	55	22.4	55	24.8	55	21.8	59	23.5	59	21.9	59	23.7	63	23.8	63	23.0	66	22.5	68	22.7	80
85	47	19.3	47	19.3	47	22.4	53	21.2	53	22.8	53	19.1	57	22.3	57	19.5	57	21.5	61	22.1	61	20.4	64	19.8	66	21.0	85
90	43	18.2	43	17.0	43	20.1	50	20.1	50	20.8	50	16.7	55	20.7	55	17.3	55	19.3	59	20.3	59	18.1	62	18.0	65	18.9	90
95	40	17.3	40	14.8	40	17.9	47	18.8	47	18.8	47	14.7	53	18.9	53	15.3	53	17.4	57	18.5	57	16.0	60	16.5	63	16.9	95
100	36	16.4	36	12.9	36	16.0	44	17.5	44	16.8	44	12.9	50	17.2	50	13.3	50	15.5	54	16.6	54	14.2	58	15.0	61	15.2	100
110	27	14.3	27	9.7	27	12.8	38	15.0	38	13.5	38	9.5	45	14.4	45	9.9	45	12.2	50	13.3	50	10.8	54	12.1	57	12.2	110
120							29	12.4	29	11.0	29	6.8	39	11.5	39	7.3	39	9.5	45	10.7	45	8.4	50	9.5	53	9.5	120
130							18	10.2	18	8.8	18	4.8	32	9.3	32	5.3	32	7.3	40	8.4	40	6.0	46	7.3	50	7.3	130
140													23	7.4	23	3.5	23	5.4	34	6.6	34	4.5	41	5.4	45	5.4	140
150																			27	5.0	27	2.8	36	4.1	40	4.1	150
160																			16	3.9			29	2.4	35	2.4	160
Telescoping sequence %																											
Tel. 1	0		93		46		0		46		93		0		93		46		46		93		93		100		Tel. 1
Tel. 2	0		46		46		46		46		93		93		93		93		93		93		93		100		Tel. 2
Tel. 3	93		46		46		93		46		46		93		93		93		93		93		93		100		Tel. 3
Tel. 4	93		46		46		93		93		46		93		46		93		93		93		93		100		Tel. 4
Tel. 5	93		46		93		93		93		46		93		46		46		93		46		93		100		Tel. 5

Operation and maintenance of this machine must be in compliance with the information provided in the "Operation and Maintenance Manual" supplied with this machine.

Counterweight 28,660 lbs

Lifting capacities in 1,000 lbs according per SAE J765 on telescopic boom
On outriggers, 360° working area
Outrigger base 27.23 ft

Work. Radius (ft)	Boom length (ft)																								Work. Radius (ft)
	128.9 ∠°		128.9 ∠°		128.9 ∠°		143.4 ∠°		143.4 ∠°		143.3 ∠°		157.5 ∠°		157.5 ∠°		157.5 ∠°		171.9 ∠°		171.9 ∠°		186.0 ∠°		196.9 ∠°		
9																											9
10																											10
12																											12
14																											14
16																											16
18																											18
20	81	57.2	81	91.3	81	71.0	82	49.4	82	54.0	82	73.6															20
25	78	51.6	78	91.3	78	68.0	80	49.4	80	53.7	80	73.6	81	43.0	81	59.3	81	49.2									25
30	76	45.9	76	83.8	76	61.9	78	47.2	78	50.1	78	73.3	80	43.0	80	59.3	80	49.2	81	38.8	81	47.6	82	37.5			30
35	74	41.4	74	70.6	74	56.8	76	42.8	76	45.9	76	68.0	78	42.0	78	58.0	78	48.1	79	38.8	79	47.0	80	37.5	81	30.9	35
40	72	37.5	72	55.6	72	52.2	74	39.1	74	42.2	74	55.3	76	39.5	76	54.4	76	45.9	78	38.6	78	45.7	79	37.4	80	30.9	40
45	69	34.1	69	46.8	69	46.9	71	36.1	71	39.1	71	46.6	74	36.7	74	47.0	74	42.7	75	36.9	75	42.9	77	36.3	78	30.9	45
50	66	31.3	66	38.8	66	41.2	69	33.3	69	36.5	69	38.7	72	34.1	72	39.2	72	37.7	74	34.7	74	37.0	76	34.4	77	30.9	50
55	64	28.9	64	32.1	64	35.6	67	30.9	67	34.0	67	32.1	70	31.8	70	32.5	70	32.7	72	31.8	72	31.5	74	31.2	75	29.8	55
60	61	26.8	61	26.8	61	30.3	65	28.8	65	31.1	65	26.7	68	29.6	68	27.2	68	28.2	71	28.5	71	27.1	73	27.2	74	27.4	60
65	58	24.9	58	22.6	58	25.9	62	26.9	62	26.4	62	22.4	66	26.6	66	23.0	66	24.3	68	25.5	68	23.4	70	24.0	72	24.4	65
70	56	22.9	56	19.0	56	22.4	60	23.9	60	23.1	60	18.9	64	23.7	64	19.4	64	21.5	67	22.6	67	20.3	69	20.9	71	21.4	70
75	53	20.8	53	15.9	53	19.3	58	21.3	58	20.3	58	15.9	62	21.0	62	16.3	62	18.8	65	19.9	65	17.3	67	18.3	69	18.6	75
80	50	18.8	50	13.3	50	16.6	55	19.2	55	17.7	55	13.3	59	18.4	59	13.8	59	16.2	63	17.3	63	14.7	66	16.0	68	16.2	80
85	47	17.3	47	11.2	47	14.5	53	16.9	53	15.4	53	11.2	57	16.0	57	11.6	57	14.0	61	14.9	61	12.5	64	13.8	66	13.8	85
90	43	15.3	43	9.3	43	12.6	50	15.0	50	13.3	50	9.3	55	14.1	55	9.7	55	12.0	59	13.0	59	10.6	62	11.9	65	11.9	90
95	40	13.5	40	7.6	40	10.9	47	13.3	47	11.6	47	7.6	53	12.4	53	8.1	53	10.3	57	11.4	57	9.0	60	10.2	63	10.3	95
100	36	11.9	36	6.2	36	9.3	44	11.6	44	10.2	44	6.1	50	10.8	50	6.6	50	8.8	54	9.9	54	7.5	58	8.6	61	8.8	100
110	27	9.4	27	3.7	27	6.8	38	9.1	38	7.6	38	3.5	45	8.1	45	4.1	45	6.1	50	7.4	50	5.0	54	6.1	57	6.1	110
120							29	7.0	29	5.4			39	6.2			39	4.2	45	5.2	45	3.0	50	4.0	53	4.0	120
130							18	5.3	18	3.9			32	4.4			32	2.4	40	3.5							130
140													23	2.9													140
150																											150
160																											160
Telescoping sequence %																											
Tel. 1	0		93		46		0		46		93		0		93		46		46		93		93		100		Tel. 1
Tel. 2	0		46		46		46		46		93		93		93		93		93		93		93		100		Tel. 2
Tel. 3	93		46		46		93		46		46		93		93		93		93		93		93		100		Tel. 3

On outriggers, 360° working area
Outrigger base 27.23 ft

Boom length (ft)

Work. Radius (ft)	43.3 ∠° 1)			57.7 ∠°		57.7 ∠°		71.9 ∠°		71.9 ∠°		71.9 ∠°		71.9 ∠°		83.3 ∠°		86.3 ∠°		86.3 ∠°		100.4 ∠°		100.4 ∠°		100.4 ∠°		114.8 ∠°		114.8 ∠°		114.8 ∠°		Work. Radius (ft)
9																																	9
10	70	326.0*	306.0*	76	117.0	76	264.5*	79	85.5	79	120.5	79	255.0*	79	223.0	81	88.9	81	116.5	81	196.5													10
12	67	274.0*	274.0*	73	110.0	73	260.0*	77	79.7	77	118.5	77	252.5*	77	223.0	80	83.6	80	116.5	80	196.5	82	73.0	82	109.5	82	162.5							12
14	64	235.5	235.5	71	104.0	71	235.0	75	74.6	75	113.0	75	233.5	75	222.0	78	78.9	78	116.5	78	196.5	80	68.1	80	109.5	80	156.0							14
16	61	205.5	205.5	69	98.5	69	205.0	73	69.9	73	107.5	73	203.5	73	206.0	77	74.3	77	113.5	77	196.5	79	63.7	79	109.5	79	145.5	81	65.0	81	99.5	81	121.5	16
18	58	181.0	181.0	67	93.7	67	180.5	72	65.9	72	102.5	72	178.5	72	183.0	76	70.2	76	109.0	76	179.0	78	60.0	78	109.5	78	136.5	80	61.5	80	99.5	80	119.5	18
20	54	156.0	156.0	65	89.1	65	156.0	71	62.1	71	98.3	71	152.5	71	159.5	74	66.2	74	104.5	74	156.0	77	56.6	77	109.0	77	127.1	79	58.2	79	99.5	79	117.0	20
25	45	97.7	95.9	59	79.7	59	95.6	66	54.6	66	87.4	66	91.0	66	96.6	71	58.1	71	94.3	71	94.1	74	49.4	74	95.3	74	91.4	76	51.6	76	91.9	76	90.8	25
30	32	66.2	62.0	52	65.3	52	61.6	62	48.5	62	69.7	62	59.6	62	64.4	67	51.5	67	72.4	67	62.2	71	43.8	71	71.3	71	60.0	74	46.1	74	68.7	74	63.1	30
35				45	49.6	45	43.8	56	43.7	56	52.5	56	41.9	56	46.1	63	46.2	63	53.0	63	44.2	68	39.2	68	52.1	68	42.2	71	41.7	71	49.8	71	45.0	35
40				37	38.0	37	32.5	51	39.3	51	40.4	51	31.0	51	34.7	59	40.8	59	41.1	59	33.0	65	35.5	65	40.2	65	31.2	69	37.8	69	38.4	69	33.8	40
45				26	29.8	26	24.2	45	32.4	45	32.4	45	22.9	45	26.6	55	34.3	55	32.8	55	25.1	62	32.2	62	32.0	62	23.1	66	33.3	66	30.2	66	25.8	45
50								39	26.4	39	26.2	39	16.9	39	20.6	50	28.4	50	26.7	50	19.1	58	28.2	58	25.8	58	17.2	63	28.7	63	24.0	63	19.6	50
55								31	21.6	31	21.3	31	12.2	31	15.8	46	23.6	46	21.8	46	14.3	54	24.1	54	20.8	54	12.5	59	24.4	59	19.1	59	14.8	55
60								22	17.5	22	17.1	22	8.3	22	11.8	41	19.7	41	17.9	41	10.5	50	20.1	50	16.8	50	8.7	56	20.6	56	15.3	56	11.1	60
65																35	16.5	35	14.5	35	7.4	46	16.9	46	13.8	46	5.7	53	17.4	53	12.1	53	7.9	65
70																27	13.9	27	12.0	27	5.1	42	14.5	42	11.2	42	2.6	50	14.8	50	9.6	50	5.4	70
75																20	11.4	20	9.7	20	3.0	37	12.2	37	9.0			47	12.5	47	7.6	47	3.1	75
80																						31	10.2	31	7.1			43	10.6	43	5.8			80
85																						24	8.7	24	5.6			39	8.9	39	4.3			85
90																						18	7.2	18	4.1			34	7.6	34	3.1			90
95																												29	6.3					95
100																												23	5.1					100
110																																		110
120																																		120
130																																		130
140																																		140
150																																		150
Telescoping sequence %																																		
Tel. 1	0			0		0		0		0		46		0		0		0		46		0		0		93		0		46		93		Tel. 1
Tel. 2	0			0		46		0		0		46		46		0		0		46		0		46		46		0		46		46		Tel. 2
Tel. 3	0			0		0		0		0		0		46		0		46		46		0		46		46		46		46		46		Tel. 3
Tel. 4	0			0		0		0		46		0		0		46		46		0		93		46		0		93		46		46		Tel. 4
Tel. 5	0			46		0		93		46		0		0		93		46		0		93		46		0		93		46		0		Tel. 5

1) Over rear with superstructure pin engaged
*With additional lifting equipment.
Operation and maintenance of this machine must be in compliance with the information provided in the "Operation and Maintenance Manual" supplied with this machine.

Counterweight 81,570 lbs

Lifting capacities in 1,000 lbs according per SAE J765 on telescopic boom
On outriggers, 360° working area
Outrigger base 18.37 ft

Boom length (ft)

Work. Radius (ft)	43.3 ∠° 1)			57.7 ∠°		57.7 ∠°		71.9 ∠°		71.9 ∠°		71.9 ∠°		71.9 ∠°		83.3 ∠°		86.3 ∠°		86.3 ∠°		100.4 ∠°		100.4 ∠°		100.4 ∠°		114.8 ∠°		114.8 ∠°		114.8 ∠°		Work. Radius (ft)
9	71	400.0*																															9
10	70	350.5*	287.0*	76	117.0	76	264.5*	79	85.5	79	120.5	79	255.0*	79	223.0	81	88.9	81	116.5	81	196.5													10
12	67	318.0*	257.0*	73	110.0	73	264.5*	77	79.7	77	118.5	77	255.0*	77	223.0	80	83.6	80	116.5	80	196.5	82	73.0	82	109.5	82	162.5							12
14	64	279.0*	232.0	71	104.0	71	253.5*	75	74.6	75	112.5	75	249.5*	75	222.0	78	78.9	78	116.5	78	196.5	80	68.1	80	109.5	80	156.0							14
16	61	247.0*	211.0	69	98.5	69	227.0	73	69.9	73	107.5	73	226.0	73	212.5	77	74.3	77	113.5	77	190.0	79	63.7	79	109.5	79	145.5	81	65.0	81	99.5	81	121.5	16
18	58	220.5	194.0	67	93.7	67	210.0	72	65.9	72	102.5	72	208.5	72	200.5	76	70.2	76	109.0	76	168.5	78	60.0	78	109.5	78	136.5	80	61.5	80	99.5	80	119.5	18
20	54	197.0	177.0	65	89.1	65	195.0	71	62.1	71	98.3	71	194.5	71	188.5	74	66.2	74	104.5	74	146.0	77	56.6	77	109.5	77	127.5	79	58.2	79	99.5	79	117.0	20
25	45	156.5	124.5	59	79.7	59	156.5	66	54.6	66	87.4	66	155.0	66	157.5	71	58.1	71	95.2	71	109.5	74	49.4	74	100.0	74	101.5	76	51.6	76	98.3	76	98.5	25
30	32	128.0	90.2	52	72.1	52	128.0	62	48.5	62	77.7	62	127.0	62	129.5	67	51.5	67	86.1	67	86.3	71	43.8	71	88.9	71	80.3	74	46.1	74	83.2	74	79.0	30
35				45	66.2	45	107.5	56	43.7	56	70.2	56	106.0	56	109.5	63	46.2	63	76.0	63	69.5	68	39.2	68	73.6	68	65.0	71	41.7	71	69.1	71	64.9	35
40				37	60.4	37	93.0	51	39.7	51	63.7	51	86.7	51	90.3	59	41.9	59	63.3	59	56.0	65	35.5	65	62.2	65	53.9	69	38.0	69	58.4	69	54.3	40
45				26	50.0	26	76.7	45	36.5	45	58.5	45	74.6	45	77.7	55	38.4	55	52.7	55	46.0	62	32.3	62	52.0	62	44.3	66	35.0	66	49.9	66	46.1	45
50								39	33.9	39	54.1	39	63.2	39	66.4	50	35.4	50	44.7	50	38.2	58	29.7	58	44.0	58	36.8	63	32.3	63	42.4	63	38.7	50
55								31	31.6	31	50.4	31	53.6	31	56.7	46	32.8	46	38.2	46	31.9	54	27.4	54	37.6	54	30.6	59	30.0	59	36.0	59	32.4	55
60								22	29.6	22	47.2	22	45.7	22	48.5	41	30.5	41	32.9	41	26.8	50	25.5	50	32.3	50	25.5	56	27.9	56	30.8	56	27.4	60
65																35	28.7	35	28.7	35	22.8	46	23.8	46	28.1	46	21.4	53	26.2	53	26.7	53	23.2	65
70																27	26.5	27	25.3	27	19.5	42	22.3	42	24.8	42	18.1	50	24.7	50	23.3	50	19.9	70
75																20	24.3	20	21.9	20	16.3	37	20.9	37	21.9	37	15.2	47	23.3	47	20.3	47	17.0	75
80																						31	19.8	31	19.2	31	12.7	43	21.8	43	17.7	43	14.4	80
85																						24	18.8	24	16.9	24	10.5	39	19.7	39	15.6	39	12.3	85
90																						18	17.8	18	14.5	18	8.3	34	17.9	34	13.7	34	10.5	90
95																												29	16.1	29	12.1	29	8.9	95
100																												23	14.5	23	10.5	23	7.2	100
110																																		110
120																																		120
130																																		130
140																																		140
150																																		150
Telescoping sequence %																																		
Tel. 1	0			0		0		0		0		46		0		0		0		46		0		0		93		0		46		93		Tel. 1
Tel. 2	0			0		46		0		0		46		46		0		0		46		0		46		46		0		46		46		Tel. 2
Tel. 3	0			0		0		0		0		0		46		0		46		46		0		46		46		46		46		46		Tel. 3
Tel. 4	0			0		0		0		46		0		0		46		46		0		93		46		0		93		46		46		Tel. 4
Tel. 5	0			46		0		93		46		0		0		93		46		0		93		46		0		93		46		0		Tel. 5

1) Over rear with superstructure pin engaged
*With additional lifting equipment.
Operation and maintenance of this machine must be in compliance with the information provided in the "Operation and Maintenance Manual" supplied with this machine.

Lifting capacities in 1,000 lbs according per SAE J765 on telescopic boom
On outriggers, 360° working area
Outrigger base 27.23 ft

Work. Radius (ft)	Boom length (ft)																								Work. Radius (ft)
	128.9		128.9		128.9		143.4		143.4		143.3		157.5		157.5		157.5		171.9		171.9		186.0		196.9		
	° ∠		° ∠		° ∠		° ∠		° ∠		° ∠		° ∠		° ∠		° ∠		° ∠		° ∠		° ∠		° ∠		
9																											9
10																											10
12																											12
14																											14
16																											16
18																											18
20	81	57.2	81	91.3	81	71.0	82	49.4	82	54.0																	20
25	78	51.6	78	87.0	78	68.0	80	49.4	80	53.7																	25
30	76	45.9	76	66.3	76	61.4	78	47.2	78	50.1																	30
35	74	41.4	74	47.8	74	49.1	76	42.8	76	45.9																	35
40	72	37.4	72	36.5	72	37.8	74	38.8	74	38.9																	40
45	69	33.0	69	28.4	69	31.8	71	34.0	71	32.5																	45
50	66	28.4	66	22.2	66	26.0	69	28.4	69	26.8																	50
55	64	24.0	64	17.3	64	21.0	67	23.6	67	22.0																	55
60	61	20.1	61	13.3	61	17.1	65	19.7	65	18.1																	60
65	58	16.9	58	10.3	58	14.0	62	16.5	62	14.7																	65
70	56	14.5	56	7.9	56	11.3	60	13.9	60	12.3																	70
75	53	12.2	53	5.8	53	9.1	58	11.6	58	10.1																	75
80	50	10.2	50	3.9	50	7.3	55	9.7	55	8.2																	80
85	47	8.7			47	5.6	53	8.0	53	6.7																	85
90	43	7.2			43	4.4	50	6.8	50	5.2																	90
95	40	5.9			40	3.3	47	5.7	47	3.9																	95
100	36	4.8					44	4.6	44	2.7																	100
110	27	3.1					38	2.9																			110
120																											120
130																											130
140																											140
150																											150
Telescoping sequence %																											
Tel. 1	0		93		46		0		46		93		0		93		46		46		93		93		100		Tel. 1
Tel. 2	0		46		46		46		46		93		93		93		93		93		93		93		100		Tel. 2
Tel. 3	93		46		46		93		46		46		93		93		93		93		93		93		100		Tel. 3
Tel. 4	93		46		46		93		93		46		93		46		93		93		93		93		100		Tel. 4
Tel. 5	93		46		93		93		93		46		93		46		46		93		46		93		100		Tel. 5

Operation and maintenance of this machine must be in compliance with the information provided in the "Operation and Maintenance Manual" supplied with this machine.

Counterweight 81,570 lbs

Lifting capacities in 1,000 lbs according per SAE J765 on telescopic boom
On outriggers, 360° working area
Outrigger base 18.37 ft

Work. Radius (ft)	Boom length (ft)																								Work. Radius (ft)
	128.9		128.9		128.9		143.4		143.4		143.3		157.5		157.5		157.5		171.9		171.9		186.0		196.9		
	° ∠		° ∠		° ∠		° ∠		° ∠		° ∠		° ∠		° ∠		° ∠		° ∠		° ∠		° ∠		° ∠		
9																											9
10																											10
12																											12
14																											14
16																											16
18																											18
20	81	57.2	81	91.3	81	71.0	82	49.4	82	54.0	82	73.6															20
25	78	51.6	78	91.1	78	68.0	80	49.4	80	53.7	80	73.6	81	43.0	81	59.3	81	49.2									25
30	76	45.9	76	77.8	76	61.9	78	47.2	78	50.1	78	72.7	80	43.0	80	59.3	80	49.2	81	38.8	81	47.6	82	37.5			30
35	74	41.4	74	64.4	74	56.8	76	42.8	76	45.9	76	62.2	78	42.0	78	58.0	78	48.1	79	38.8	79	47.0	80	37.5	81	30.9	35
40	72	37.5	72	54.1	72	52.4	74	39.1	74	42.2	74	52.2	76	39.5	76	51.3	76	45.9	78	38.6	78	45.7	79	37.4	80	30.9	40
45	69	34.1	69	45.8	69	48.6	71	36.1	71	39.1	71	44.8	74	36.7	74	43.9	74	42.7	75	36.9	75	42.9	77	36.3	78	30.9	45
50	66	31.3	66	39.8	66	43.2	69	33.3	69	36.5	69	38.9	72	34.1	72	38.2	72	39.5	74	34.7	74	40.0	76	34.4	77	30.9	50
55	64	28.9	64	34.4	64	37.6	67	30.9	67	34.2	67	33.8	70	31.8	70	33.4	70	35.8	72	32.5	72	35.8	74	32.2	75	30.0	55
60	61	26.8	61	29.4	61	32.5	65	28.8	65	31.8	65	29.2	68	29.9	68	29.3	68	31.6	71	30.5	71	30.5	73	29.8	74	28.2	60
65	58	24.9	58	25.2	58	28.3	62	26.9	62	28.8	62	25.0	66	28.0	66	25.6	66	27.6	68	28.5	68	26.5	70	26.6	72	26.1	65
70	56	23.4	56	21.7	56	24.8	60	25.2	60	25.5	60	21.7	64	25.7	64	22.2	64	24.2	67	25.3	67	23.1	69	23.6	71	23.6	70
75	53	21.9	53	18.9	53	21.9	58	23.3	58	22.5	58	18.8	62	23.2	62	19.2	62	21.2	65	22.3	65	20.1	67	20.7	69	21.1	75
80	50	20.4	50	16.4	50	19.3	55	21.3	55	20.0	55	16.2	59	20.6	59	16.6	59	18.6	63	19.7	63	17.5	66	18.2	68	18.6	80
85	47	19.3	47	14.2	47	17.1	53	19.1	53	17.8	53	14.0	57	18.2	57	14.5	57	16.4	61	17.5	61	15.3	64	16.0	66	16.4	85
90	43	17.4	43	12.4	43	15.1	50	17.2	50	15.9	50	12.2	55	16.3	55	12.6	55	14.6	59	15.7	59	13.5	62	14.1	65	14.6	90
95	40	15.8	40	10.6	40	13.4	47	15.5	47	14.2	47	10.5	53	14.7	53	11.0	53	12.9	57	13.9	57	11.8	60	12.4	63	12.9	95
100	36	14.3	36	9.1	36	11.9	44	13.9	44	12.6	44	9.1	50	13.2	50	9.5	50	11.5	54	12.4	54	10.4	58	10.8	61	11.4	100
110	27	11.6	27	6.5	27	9.4	38	11.4	38	10.1	38	6.5	45	10.6	45	7.0	45	8.8	50	9.8	50	7.7	54	8.3	57	8.7	110
120							29	9.2	29	8.0	29	4.5	39	8.4	39	4.9	39	6.7	45	7.8	45	5.6	50	6.1	53	6.7	120
130							18	7.5	18	6.2	18	2.5	32	6.6	32	2.9	32	5.1	40	5.9	40	4.0	46	4.4	50	5.0	130
140													23	5.2			23	3.5	34	4.6	34	2.6	41	2.7	45	3.5	140
150																			27	3.2							150
Telescoping sequence %																											
Tel. 1	0		93		46		0		46		93		0		93		46		46		93		93		100		Tel. 1
Tel. 2	0		46		46		46		46		93		93		93		93		93		93		93		100		Tel. 2
Tel. 3	93		46		46		93		46		46		93		93		93		93		93		93		100		Tel. 3
Tel. 4	93		46		46		93		93		46		93		46		93		93		93		93		100		Tel. 4

On outriggers, 360° working area
Outrigger base 18.37 ft

Boom length (ft)

Work. Radius (ft)	43.3			57.7		57.7		71.9		71.9		71.9		71.9		83.3		86.3		86.3		100.4		100.4		100.4		114.8		114.8		114.8		Work. Radius (ft)
	° ∠	1)		° ∠		° ∠		° ∠		° ∠		° ∠		° ∠		° ∠		° ∠		° ∠		° ∠		° ∠		° ∠		° ∠		° ∠		° ∠		
9	71	400.0*																																9
10	70	350.5*	280.5*	76	117.0	76	264.0*	79	85.5	79	120.5	79	255.0*	79	223.0	81	88.9	81	116.5	81	196.5													10
12	67	315.5*	251.5*	73	110.0	73	251.5*	77	79.7	77	118.5	77	243.5*	77	223.0	80	83.6	80	116.5	80	196.5	82	73.0	82	109.5	82	162.5							12
14	64	267.0*	227.0	71	104.0	71	221.5	75	74.6	75	112.5	75	200.5	75	205.0	78	78.9	78	116.5	78	182.0	80	68.1	80	109.5	80	156.0							14
16	61	233.5	204.0	69	98.5	69	185.0	73	69.9	73	107.5	73	181.5	73	170.0	77	74.3	77	113.5	77	153.0	79	63.7	79	109.5	79	137.0	81	65.0	81	99.5	81	122	16
18	58	208.5	175.0	67	93.7	67	157.0	72	65.9	72	102.5	72	152.0	72	145.5	76	70.2	76	109.0	76	132.0	78	60.0	78	109.5	78	119.5	80	61.5	80	99.5	80	112	18
20	54	186.5	145.5	65	89.1	65	132.5	71	62.1	71	98.3	71	120.0	71	124.5	74	66.2	74	104.5	74	113.5	77	56.6	77	108.5	77	104.0	79	58.2	79	98.0	79	####	20
25	45	148.0	97.3	59	79.7	59	95.5	66	54.6	66	87.4	66	87.9	66	92.1	71	58.1	71	91.5	71	84.4	74	49.4	74	87.2	74	78.0	76	51.6	76	80.9	76	76.2	25
30	32	117.0	69.4	52	71.5	52	69.2	62	48.5	62	76.7	62	67.1	62	70.8	67	51.5	67	73.8	67	65.2	71	43.8	71	69.2	71	59.9	74	46.1	74	63.9	74	59.7	30
35				45	57.6	45	52.7	56	43.7	56	60.0	56	51.1	56	54.7	63	46.2	63	60.0	63	52.5	68	39.2	68	56.7	68	48.6	71	41.7	71	52.8	71	48.5	35
40				37	46.1	37	41.5	51	39.7	51	48.5	51	40.0	51	43.5	59	41.9	59	49.0	59	42.0	65	35.5	65	47.5	65	39.4	69	38.0	69	43.9	69	40.0	40
45				26	37.7	26	33.3	45	36.5	45	40.0	45	31.9	45	35.1	55	38.4	55	60.4	55	33.7	62	32.3	62	39.6	62	32.0	66	35.0	66	37.2	66	33.4	45
50								39	32.7	39	33.4	39	25.8	39	28.7	50	34.6	50	33.9	50	27.4	58	29.7	58	33.2	58	26.0	63	32.3	63	31.4	63	27.8	50
55								31	28.5	31	28.2	31	20.7	31	23.6	46	30.4	46	28.6	46	22.4	54	27.4	54	28.0	54	21.0	59	29.7	59	26.5	59	22.9	55
60								22	24.1	22	23.9	22	16.4	22	19.2	41	26.0	41	24.3	41	18.3	50	25.3	50	23.8	50	16.8	56	26.9	56	22.3	56	18.8	60
65																35	22.5	35	20.9	35	15.0	46	22.8	46	20.3	46	13.6	53	23.4	53	18.7	53	15.4	65
70																27	19.7	27	18.1	27	12.2	42	20.1	42	17.5	42	10.9	50	20.6	50	16.1	50	12.6	70
75																20	17.0	20	15.5	20	9.5	37	17.7	37	15.1	37	8.6	47	18.1	47	13.8	47	10.3	75
80																						31	15.6	31	13.0	31	6.6	43	15.8	43	11.7	43	8.4	80
85																						24	13.8	24	11.1	24	5.0	39	14.0	39	9.8	39	6.5	85
90																						18	11.9	18	9.3	18	3.3	34	12.5	34	8.3	34	5.1	90
95																												29	11.1	29	6.9	29	3.8	95
100																												23	9.7	23	5.5			100
110																																		110
120																																		120
130																																		130
140																																		140
150																																		150
Telescoping sequence %																																		
Tel. 1	0			0		0		0		0		46		0		0		0		46		0		0		93		0		46		93		Tel. 1
Tel. 2	0			0		46		0		0		46		46		0		0		46		0		46		46		0		46		46		Tel. 2
Tel. 3	0			0		0		0		0		0		46		0		46		46		0		46		46		46		46		46		Tel. 3
Tel. 4	0			0		0		0		46		0		0		46		46		0		93		46		0		93		46		46		Tel. 4
Tel. 5	0			46		0		93		46		0		0		93		46		0		93		46		0		93		46		0		Tel. 5

1) Over rear with superstructure pin engaged
*With additional lifting equipment.
Operation and maintenance of this machine must be in compliance with the information provided in the "Operation and Maintenance Manual" supplied with this machine

Counterweight 0 lbs

Lifting capacities in 1,000 lbs according per SAE J765 on telescopic boom
On outriggers, 360° working area
Outrigger base 18.37 ft

Boom length (ft)

Work. Radius (ft)	43.3			57.7		57.7		71.9		71.9		71.9		71.9		83.3		86.3		86.3		100.4		100.4		100.4		114.8		114.8		114.8		Work. Radius (ft)
	° ∠			° ∠		° ∠		° ∠		° ∠		° ∠		° ∠		° ∠		° ∠		° ∠		° ∠		° ∠		° ∠		° ∠		° ∠		° ∠		
9																																		9
10	70		242.0	76	117.0	76	192.0	79	85.5	79	120.5	79	155.0	79	162.0	81	88.9	81	116.5	81	134.6													10
12	67		164.5	73	110.0	73	137.0	77	79.7	77	117.5	77	114.0	77	120.5	80	83.6	80	111.5	80	102.7	82	73.0											12
14	64		120.5	71	104.0	71	103.5	75	74.6	75	103.0	75	88.7	75	94.4	78	78.9	78	93.0	78	81.6	80	68.1											14
16	61		93.1	69	89.9	69	82.1	73	69.9	73	84.3	73	71.2	73	76.2	77	74.3	77	77.2	77	66.5	79	63.7											16
18	58		76.4	67	75.4	67	68.1	72	65.7	72	71.6	72	59.2	72	64.1	76	66.9	76	66.0	76	55.7	78	59.6											18
20	54		62.3	65	62.8	65	56.0	71	60.9	71	60.5	71	48.6	71	53.5	74	58.9	74	56.2	74	46.2	77	55.2											20
25	45		39.9	59	43.8	59	37.8	66	43.6	66	43.3	66	32.7	66	36.7	71	43.3	71	40.9	71	32.3	74	41.1											25
30	32		25.8	52	31.0	52	25.6	62	32.5	62	32.3	62	22.4	62	26.2	67	32.8	67	30.6	67	22.5	71	31.5											30
35				45	22.3	45	17.4	56	24.9	56	24.6	56	15.6	56	19.2	63	25.9	63	23.8	63	16.4	68	25.1											35
40				37	16.4	37	11.8	51	19.0	51	18.8	51	10.3	51	13.6	59	20.8	59	18.7	59	11.7	65	20.3											40
45				26	12.1	26	7.6	45	14.5	45	14.3	45	6.3	45	9.4	55	16.5	55	14.6	55	8.0	62	16.6											45
50								39	11.2	39	10.9			39	6.3	50	13.1	50	11.3	50	4.3	58	13.4											50
55								31	8.5	31	8.2			31	3.4	46	10.3	46	8.5			54	10.7											55
60								22	6.2	22	6.0					41	8.0	41	6.3			50	8.5											60
65																35	6.2	35	4.6			46	6.6											65
70																27	4.8	27	3.1			42	5.1											70
75																20	3.4					37	3.6											75
80																																		80
85																																		85
90																																		90
95																																		95
100																																		100
110																																		110
120																																		120
130																																		130
140																																		140
150																																		150
Telescoping sequence %																																		
Tel. 1	0			0		0		0		0		46		0		0		0		46		0		0		93		0		46		93		Tel. 1
Tel. 2	0			0		46		0		0		46		46		0		0		46		0		46		46		0		46		46		Tel. 2
Tel. 3	0			0		0		0		0		0		46		0		46		46		0		46		46		46		46		46		Tel. 3
Tel. 4	0			0		0		0		46		0		0		46		46		0		93		46		0		93		46		46		Tel. 4
Tel. 5	0			46		0		93		46		0		0		93		46		0		93		46		0		93		46		0		Tel. 5

1) Over rear with superstructure pin engaged
*With additional lifting equipment.
Operation and maintenance of this machine must be in compliance with the information provided in the "Operation and Maintenance Manual" supplied with this machine

Lifting capacities in 1,000 lbs according per SAE J765 on telescopic boom
On outriggers, 360° working area
Outrigger base 18.37 ft

Work. Radius (ft)	Boom length (ft)																										Work. Radius (ft)
	128.9		128.9		128.9		143.4		143.4		143.3		157.5		157.5		157.5		171.9		171.9		186.0		196.9		
	∠°		∠°		∠°		∠°		∠°		∠°		∠°		∠°		∠°		∠°		∠°		∠°		∠°		
9																											9
10																											10
12																											12
14																											14
16																											16
18																											18
20	81	57.2	81	90.4	81	71.0	82	49.4	82	54.0	82	73.6															20
25	78	51.6	78	74.8	78	68.0	80	49.4	80	53.7	80	69.4	81	43.0	81	59.3	81	49.2									25
30	76	45.9	76	58.9	76	61.6	78	47.2	78	50.1	78	56.9	80	43.0	80	55.0	80	49.2	81	38.8	81	47.6	82	37.5			30
35	74	41.4	74	48.8	74	52.4	76	42.8	76	45.9	76	46.7	78	42.0	78	45.5	78	47.1	79	38.8	79	44.5	80	37.5	81	30.9	35
40	72	37.5	72	40.4	72	44.1	74	39.1	74	41.9	74	38.9	76	39.5	76	38.1	76	40.5	78	38.3	78	37.9	79	36.9	80	30.9	40
45	69	34.1	69	34.2	69	37.6	71	36.1	71	36.9	71	32.7	74	36.5	74	32.2	74	34.4	75	34.3	75	32.1	77	32.2	78	30.9	45
50	66	31.3	66	29.2	66	32.5	69	33.3	69	32.4	69	28.0	72	32.1	72	27.5	72	29.9	74	30.2	74	27.7	76	28.0	77	27.4	50
55	64	28.9	64	24.8	64	28.0	67	29.9	67	28.4	67	24.0	70	28.1	70	23.7	70	26.0	72	26.5	72	23.9	74	24.3	75	23.8	55
60	61	26.4	61	20.7	61	23.8	65	26.0	65	24.7	65	20.5	68	24.8	68	20.4	68	22.6	71	23.1	71	20.7	73	21.1	74	20.7	60
65	58	22.9	58	17.4	58	20.3	62	22.7	62	21.2	62	17.2	66	21.8	66	17.7	66	19.8	68	20.4	68	18.0	70	18.6	72	18.2	65
70	56	20.1	56	14.6	56	17.5	60	19.8	60	18.4	60	14.4	64	19.0	64	15.1	64	17.0	67	18.0	67	15.7	69	16.4	71	15.9	70
75	53	17.7	53	12.2	53	15.1	58	17.3	58	16.0	58	12.1	62	16.5	62	12.7	62	14.6	65	15.6	65	13.5	67	14.2	69	14.0	75
80	50	15.6	50	10.2	50	13.0	55	15.2	55	13.9	55	10.1	59	14.3	59	10.6	59	12.5	63	13.5	63	11.4	66	12.1	68	12.4	80
85	47	13.8	47	8.5	47	11.3	53	13.3	53	12.0	53	8.3	57	12.7	57	8.7	57	10.7	61	11.8	61	9.6	64	10.3	66	10.7	85
90	43	12.1	43	7.0	43	9.8	50	11.8	50	10.5	50	6.7	55	11.0	55	7.2	55	9.2	59	10.3	59	8.1	62	8.7	65	9.2	90
95	40	10.7	40	5.6	40	8.4	47	10.4	47	9.1	47	5.4	53	9.6	53	5.9	53	7.9	57	8.9	57	6.8	60	7.3	63	7.8	95
100	36	9.6	36	4.3	36	7.1	44	9.1	44	7.8	44	4.3	50	8.4	50	4.7	50	6.7	54	7.6	54	5.6	58	6.0	61	6.5	100
110	27	7.4			27	4.9	38	6.9	38	5.8			45	6.3			45	4.5	50	5.6	50	3.4	54	4.0	57	4.5	110
120							29	5.3	29	4.1			39	4.5			39	2.8	45	3.7					53	2.8	120
130							18	3.9					32	3.0													130
140																											140
150																											150
160																											160
170																											170
180																											180
190																											190

Telescoping sequence %														
Tel. 1	0	93	46	0	46	93	0	93	46	46	93	93	100	Tel. 1
Tel. 2	0	46	46	46	46	93	93	93	93	93	93	93	100	Tel. 2
Tel. 3	93	46	46	93	46	46	93	93	93	93	93	93	100	Tel. 3
Tel. 4	93	46	46	93	93	46	93	46	93	93	93	93	100	Tel. 4
Tel. 5	93	46	93	93	93	46	93	46	46	93	46	93	100	Tel. 5

Operation and maintenance of this machine must be in compliance with the information provided in the "Operation and Maintenance Manual" supplied with this machine.

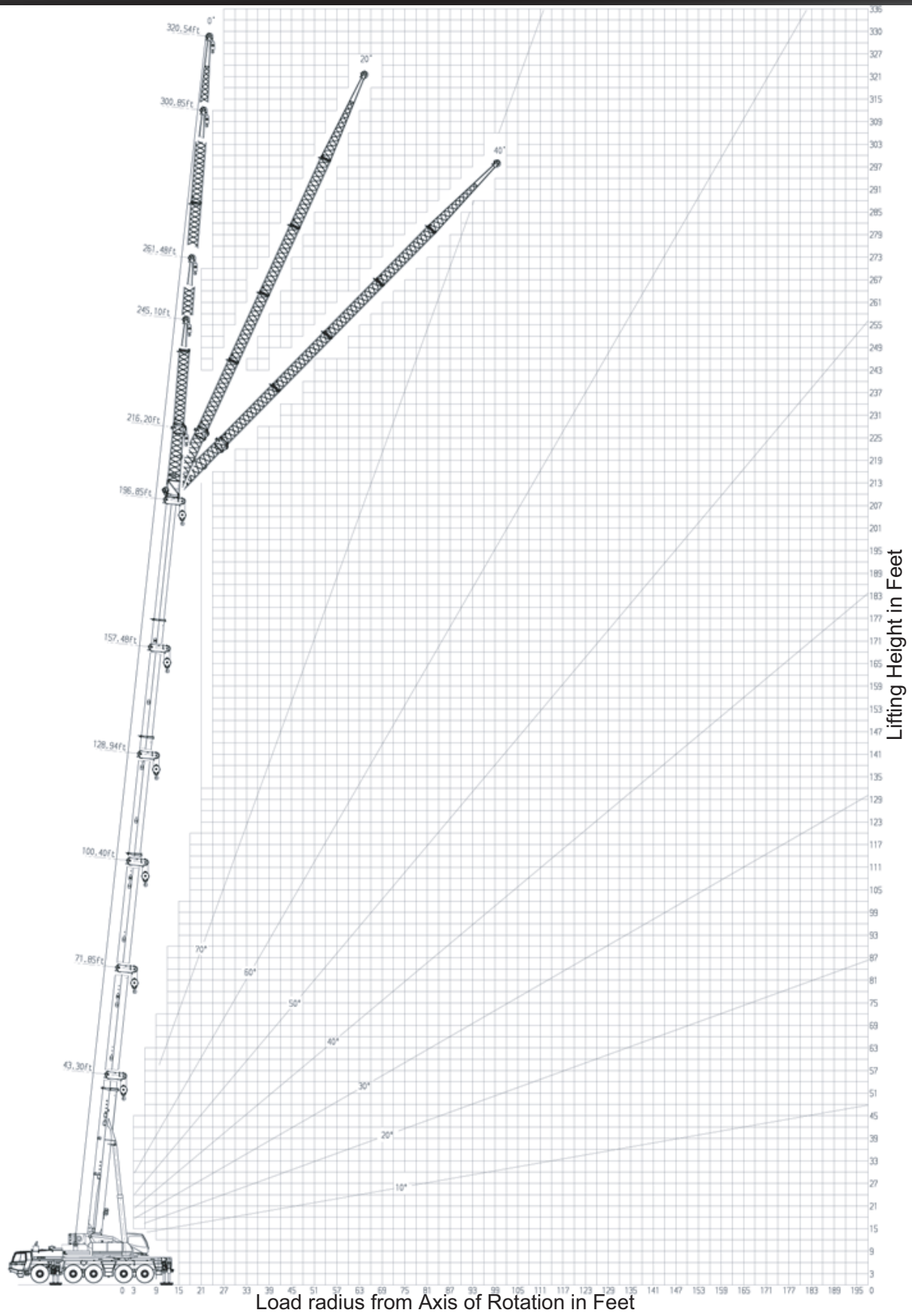

NOTE: Boom and jib geometry shown are for unloaded condition and machine standing level on firm supporting surface. Boom deflection and subsequent radius and boom angle change must be accounted for when applying load to hook.

Counterweight 112,435 lbs

Lifting capacities in 1,000 lbs according per SAE J765 on fly jib 17.72 ft
On outriggers, 360° working area
Outrigger base 27.23 ft

Working Radius (ft)	Boom length 43.3 ft						Boom length 43.3 ft to 186.0 ft						Boom length 43.3 ft to 196.9 ft						Working Radius (ft)
	Fly jib 17.72 ft offset						Fly jib 17.72 ft offset						Fly jib 17.72 ft offset						
	0°		20°		40°		5°		20°		40°		5°		20°		40°		
	∠ °		∠ °		∠ °		∠ °		∠ °		∠ °		∠ °		∠ °		∠ °		
10	76	72.8																	10
12	74	68.7	79	51.4															12
14	72	65.7	77	49.3															14
16	70	63.0	75	47.9	79	40.3													16
18	68	60.0	74	46.4	78	39.8													18
20	66	57.0	72	45.0	76	39.4													20
25	61	51.8	66	42.6	70	38.2													25
30	55	47.3	60	40.6	63	37.2													30
35	49	43.9	54	38.9	57	37.0	80	23.0											35
40	42	41.2	47	37.8	50	37.0	79	21.9	81	20.2			80	20.4					40
45	34	39.0	39	37.2			78	20.9	79	19.3			79	19.4	80	18.0			45
50	22	37.6					77	19.9	78	18.5	80	17.5	78	18.5	79	17.3	80	16.4	50
55							75	19.1	77	17.7	78	16.9	76	17.7	78	16.6	79	15.8	55
60							74	18.4	76	17.1	77	16.4	75	17.1	77	16.0	78	15.3	60
65							73	17.5	74	16.6	75	15.9	74	16.4	75	15.5	76	14.8	65
70							72	16.8	73	16.1	74	15.4	73	15.7	74	15.0	75	14.3	70
75							70	16.3	71	15.6	72	14.9	71	15.1	73	14.5	74	13.9	75
80							69	15.7	70	15.1	71	14.5	70	14.6	72	14.0	73	13.6	80
85							67	15.0	69	14.6	69	14.1	69	14.1	70	13.5	71	13.2	85
90							66	14.5	68	14.1	68	13.8	68	13.6	69	13.1	70	12.9	90
95							64	14.1	66	13.6	66	13.4	66	13.1	67	12.7	68	12.5	95
100							63	13.7	64	13.1	65	12.9	65	12.7	66	12.2	67	12.0	100
110							59	12.9	60	12.4	61	12.2	61	12.0	63	11.6	63	11.3	110
120							56	12.2	57	11.8	58	11.6	58	11.3	59	11.0	60	10.9	120
130							53	11.5	54	11.3	54	11.1	55	10.8	56	10.4	57	10.4	130
140							49	11.0	50	10.8	51	10.7	52	10.4	53	10.1	54	9.9	140
150							45	10.6	46	10.4	46	10.4	49	9.9	50	9.6	50	9.5	150
160							41	10.1	42	9.9	42	10.1	45	9.4	46	9.1	46	9.1	160
170							35	8.9	36	8.9			40	8.8	41	8.6	41	8.6	170
180							29	7.7	29	7.6			35	7.7	36	7.7			180
190													29	6.4	29	6.4			190
200													22	5.1	22	5.1			200
210																			210
220																			220
Telescoping sequence %																			
Tel. 1	0						93						100						Tel. 1
Tel. 2	0						93						100						Tel. 2
Tel. 3	0						93						100						Tel. 3
Tel. 4	0						93						100						Tel. 4
Tel. 5	0						93						100						Tel. 5

Operation and maintenance of this machine must be in compliance with the information provided in the "Operation and Maintenance Manual" supplied with this machine.

Radius (ft)	Boom length 43.3 ft to 186.0 ft																														Radius (ft)
	Fly jib 43.3 ft offset						Fly jib 63.0 ft offset						Fly jib 82.7 ft offset						Fly jib 102.4 ft offset						Fly jib 122.0 ft offset						
	0°		20°		40°		0°		20°		40°		0°		20°		40°		0°		20°		40°		0°		20°		40°		
	° ∠		° ∠		° ∠		° ∠		° ∠		° ∠		° ∠		° ∠		° ∠		° ∠		° ∠		° ∠		° ∠		° ∠		° ∠		
40	80	16.5					81	12.3					82	9.3																	40
45	79	16.5					80	12.3					81	9.3																	45
50	78	16.0					79	12.3					80	9.3					80	6.9											50
55	77	15.3	81	12.2			78	12.3					79	9.3					80	6.8					81	4.8					55
60	76	14.7	80	11.8			77	12.3					78	9.3					79	6.6					80	4.6					60
65	74	14.2	78	11.5			76	11.9					77	9.3					78	6.4					79	4.4					65
70	73	13.7	77	11.3	80	9.6	75	11.5	80	9.8			76	9.0					77	6.4					78	4.4					70
75	72	13.2	76	11.1	79	9.4	74	11.1	79	9.5			76	8.7					77	6.3					78	4.3					75
80	71	12.7	75	10.8	78	9.3	73	10.7	78	9.2			75	8.6	81	7.0			76	6.1					77	4.2					80
85	70	12.4	73	10.6	76	9.3	72	10.4	76	9.0			73	8.4	79	6.8			75	6.0					76	4.2					85
90	69	11.9	72	10.4	75	9.1	71	10.0	75	8.7	79	8.0	72	8.2	78	6.7			74	5.8					75	4.0					90
95	67	11.5	71	10.2	73	8.9	70	9.7	74	8.5	78	7.8	72	8.1	77	6.5			73	5.7	80	4.5			75	3.9					95
100	66	11.1	70	9.9	72	8.8	69	9.4	73	8.3	77	7.7	71	7.9	76	6.4	81	5.5	72	5.7	79	4.4			74	3.7					100
110	63	10.5	66	9.5	69	8.6	66	8.9	70	7.8	74	7.2	68	7.4	74	6.2	78	5.3	70	5.3	77	4.2			72	3.6	79	2.9			110
120	60	10.0	64	9.0	66	8.4	64	8.3	68	7.4	71	7.0	66	7.0	72	6.0	76	5.2	68	5.1	75	4.1	80	3.7	70	3.5	78	2.6			120
130	58	9.3	61	8.6	63	8.2	61	8.0	65	7.1	69	6.7	64	6.7	69	5.8	73	5.1	66	4.9	73	4.0	78	3.5	68	3.3	76	2.5			130
140	55	9.0	58	8.3	60	8.0	59	7.5	63	6.8	66	6.3	62	6.3	67	5.4	71	4.9	64	4.7	71	3.8	76	3.4	67	3.2	74	2.4			140
150	52	8.5	55	8.0	57	7.7	56	7.2	60	6.4	63	6.1	60	6.0	65	5.2	69	4.8	62	4.5	69	3.7	74	3.3	65	3.0	72	2.3			150
160	48	8.1	51	7.7	53	7.5	53	7.0	57	6.1	60	5.9	57	5.6	62	5.0	66	4.6	60	4.4	66	3.5	71	3.3	63	2.8	70	2.2			160
170	45	7.7	48	7.5	49	7.3	50	6.6	54	6.0	56	5.7	54	5.3	59	4.9	63	4.6	58	4.2	64	3.5	68	3.1	61	2.7	68	2.2			170
180	41	7.6	44	7.2	45	7.1	47	6.3	51	5.8	53	5.6	52	5.1	57	4.7	60	4.5	56	4.0	62	3.4	66	3.1	59	2.5					180
190	37	7.2	39	6.8	40	6.9	44	6.1	48	5.6	49	5.4	49	5.0	54	4.5	57	4.3	53	3.9	59	3.2	63	3.0	57	2.4					190
200	31	6.5	34	6.3	33	6.4	40	5.8	44	5.5	45	5.3	46	4.8	51	4.4	53	4.1	50	3.7	56	3.1	60	2.9	54	2.4					200
210	25	5.3	27	5.3	24	4.8	36	5.5	39	5.3	40	5.3	43	4.6	47	4.2	49	4.0	48	3.5	54	3.1	57	2.9	52	2.2					210
220							31	4.8	34	4.8	32	4.6	39	4.5	43	4.0	44	4.0	45	3.5	50	2.9	53	2.9	50	2.2					220
230							24	3.9	26	3.8			35	4.1	39	3.9	39	3.9	42	3.4	47	2.9	49	2.9							230
240													30	3.4	33	3.4			39	3.2	44	2.9	44	2.9							240
250													24	2.6	27	2.6			35	2.8	40	2.9	39	2.9							250
Telescoping sequence %																															
Tel. 1	93																														Tel. 1
Tel. 2	93																														Tel. 2
Tel. 3	93																														Tel. 3
Tel. 4	93																														Tel. 4
Tel. 5	93																														Tel. 5

Operation and maintenance of this machine must be in compliance with the information provided in the "Operation and Maintenance Manual" supplied with this machine

Counterweight 112,435 lbs

Working Radius (ft)	Lifting capacities in 1,000 lbs according per SAE J765 on fly jib 43.3 ft / 63.0 ft / 82.7 ft / 102.4 ft / 122.0 f On outriggers, 360° working area **Outrigger base 27.23 ft** Boom length 43.3 ft to 196.9 ft																														Working Radius (ft)
	Fly jib 43.3 ft offset						Fly jib 63.0 ft offset						Fly jib 82.7 ft offset						Fly jib 102.4 ft offset						Fly jib 122.0 ft offset						
	0°		20°		40°		0°		20°		40°		0°		20°		40°		0°		20°		40°		0°		20°		40°		
	° ∠		° ∠		° ∠		° ∠		° ∠		° ∠		° ∠		° ∠		° ∠		° ∠		° ∠		° ∠		° ∠		° ∠		° ∠		
40	81	13.9					81	10.6																							40
45	79	13.9					80	10.6																							45
50	78	13.9					79	10.6					81	7.9					82	6.2											50
55	78	13.9					79	10.6					80	7.9					81	6.2					81	4.5					55
60	77	13.9	80	11.7			78	10.6					79	7.9					80	6.2					80	4.4					60
65	75	13.8	79	11.5			77	10.6					78	7.9					79	6.2					79	4.2					65
70	74	12.8	78	11.2	80	9.6	76	10.6	80	9.4			77	7.9					78	6.0					78	4.2					70
75	74	12.4	77	10.9	79	9.4	75	10.4	80	9.1			76	7.9					77	6.0					78	4.1					75
80	73	12.0	76	10.7	78	9.2	74	10.1	79	8.8			75	7.9	81	6.8			76	5.9					77	4.0					80
85	71	11.5	74	10.4	77	9.0	73	9.7	77	8.6			74	7.9	80	6.6			75	5.7					76	4.0					85
90	70	11.1	73	10.0	76	9.0	72	9.4	76	8.3	80	7.6	73	7.9	79	6.5			74	5.6					75	3.8					90
95	69	10.8	72	9.7	75	8.9	71	9.2	75	8.1	79	7.4	73	7.7	78	6.4			74	5.5	81	4.4			75	3.7					95
100	68	10.5	71	9.4	74	8.8	70	8.9	74	7.8	78	7.2	72	7.4	77	6.3	82	5.5	73	5.5	80	4.4			74	3.7					100
110	65	10.0	68	9.1	70	8.4	67	8.4	72	7.3	75	6.9	69	7.1	75	6.0	79	5.3	71	5.1	77	4.2			72	3.5					110
120	62	9.4	66	8.5	68	8.1	65	7.9	69	7.0	73	6.6	68	6.6	73	5.9	77	5.2	70	5.0	76	4.0			71	3.3					120
130	60	8.9	63	8.2	65	7.8	63	7.5	67	6.7	70	6.2	65	6.2	71	5.6	75	5.1	67	4.9	73	4.0			69	3.1					130
140	57	8.4	60	7.9	62	7.6	61	7.2	65	6.3	68	6.0	63	5.9	69	5.2	73	4.9	66	4.7	72	3.8			68	3.1					140
150	54	8.0	57	7.5	59	7.3	58	6.9	62	6.1	65	5.9	61	5.6	67	5.0	70	4.8	64	4.5	70	3.7			66	3.0					150
160	51	7.6	54	7.2	56	7.0	55	6.5	59	5.9	62	5.6	59	5.4	64	4.8	67	4.6	62	4.4	67	3.5			64	2.8					160
170	48	7.3	51	6.9	52	6.8	53	6.2	57	5.7	59	5.3	56	5.1	61	4.6	65	4.4	60	4.2	65	3.3			62	2.7					170
180	45	7.0	47	6.7	48	6.5	50	5.9	54	5.4	56	5.1	54	4.9	59	4.5	62	4.3	58	4.0	63	3.1			61	2.6					180
190	41	6.6	44	6.5	44	6.3	47	5.6	51	5.2	53	5.1	52	4.7	56	4.3	59	4.1	56	3.9	61	3.1			59	2.5					190
200	37	6.1	39	6.1	39	5.9	44	5.4	47	5.0	49	5.0	49	4.5	53	4.1	56	3.9	53	3.7	58	3.0			54	2.4					200
210	32	5.1	34	5.3	33	5.1	40	5.1	44	4.8	44	4.8	46	4.2	50	3.7	53	3.7	51	3.5	56	2.9			52	2.4					210
220	25	4.2	27	4.3	24	3.6	35	4.6	39	4.7	39	4.7	43	3.9	47	3.4	48	3.6	48	3.4	53	2.7			49	2.3					220
230							30	3.7	34	3.8	32	3.7	39	3.5	43	3.1	44	3.4	45	3.2	50	2.6									230
240													35	3.1	39	2.8	38	3.1	42	3.0	47	2.6									240
250													31	2.4	34	2.6	32	2.4	39	2.6	44	2.4									250
Telescoping sequence %																															
Tel. 1	100																														Tel. 1
Tel. 2	100																														Tel. 2
Tel. 3	100																														Tel. 3
Tel. 4	100																														Tel. 4
Tel. 5	100																														Tel. 5

Operation and maintenance of this machine must be in compliance with the information provided in the "Operation and Maintenance Manual" supplied with this machine

On outriggers, 360° working area

Working Radius (ft)	Outrigger base 27.23 ft																		Working Radius (ft)
	Boom length 43.3 ft						Boom length 43.3 ft to 186.0 ft						Boom length 43.3 ft to 196.9 ft						
	Fly jib 17.72 ft offset						Fly jib 17.72 ft offset						Fly jib 17.72 ft offset						
	0°		20°		40°		5°		20°		40°		5°		20°		40°		
	° ∠		° ∠		° ∠		° ∠		° ∠		° ∠		° ∠		° ∠		° ∠		
10	76	72.8																	10
12	74	68.7	79	51.4															12
14	72	65.7	77	49.3															14
16	70	63.0	75	47.9	79	40.3													16
18	68	60.0	74	46.4	78	39.8													18
20	66	57.0	72	45.0	76	39.4													20
25	61	51.8	66	42.6	70	38.2													25
30	55	47.3	60	40.6	63	37.2													30
35	49	43.9	54	38.9	57	37.0	80	23.0											35
40	42	41.2	47	37.8	50	37.0	79	21.9	81	20.2			80	20.4					40
45	34	39.0	39	37.2			78	20.9	79	19.3			79	19.4	80	18.0			45
50	22	37.6					77	19.9	78	18.5	80	17.5	78	18.5	79	17.3	80	16.4	50
55							75	19.1	77	17.7	78	16.9	76	17.7	78	16.6	79	15.8	55
60							74	18.4	76	17.1	77	16.4	75	17.1	77	16.0	78	15.3	60
65							73	17.5	74	16.6	75	15.9	74	16.4	75	15.5	76	14.8	65
70							72	16.8	73	16.1	74	15.4	73	15.7	74	15.0	75	14.3	70
75							70	16.3	71	15.6	72	14.9	71	15.1	73	14.5	74	13.9	75
80							69	15.7	70	15.1	71	14.5	70	14.6	72	14.0	73	13.6	80
85							67	15.0	69	14.6	69	14.1	69	14.1	70	13.5	71	13.2	85
90							66	14.5	68	14.1	68	13.8	68	13.6	69	13.1	70	12.9	90
95							64	14.1	66	13.6	66	13.4	66	13.1	67	12.7	68	12.5	95
100							63	13.7	64	13.1	65	12.9	65	12.7	66	12.2	67	12.0	100
110							59	12.9	60	12.4	61	12.2	61	12.0	63	11.6	63	11.3	110
120							56	12.2	57	11.8	58	11.6	58	11.3	59	11.0	60	10.9	120
130							53	11.5	54	11.3	54	11.1	55	10.8	56	10.4	57	10.4	130
140							49	10.0	50	10.1	51	10.1	52	9.8	53	9.8	54	9.9	140
150							45	8.3	46	8.5	46	8.7	49	8.2	50	8.5	50	8.7	150
160							41	6.7	42	6.9	42	6.8	45	6.5	46	6.9	46	6.9	160
170							35	5.2	36	5.2			40	5.2	41	5.2	41	5.2	170
180							29	3.8	29	3.8			35	3.8	36	3.8			180
190																			190
200																			200
Telescoping sequence %																			
Tel. 1	0						93						100						Tel. 1
Tel. 2	0						93						100						Tel. 2
Tel. 3	0						93						100						Tel. 3
Tel. 4	0						93						100						Tel. 4
Tel. 5	0						93						100						Tel. 5

Operation and maintenance of this machine must be in compliance with the information provided in the "Operation and Maintenance Manual" supplied with this machine.

Radius (ft)	Boom length 43.3 ft to 186.0 ft																														Radius (ft)
	Fly jib 43.3 ft offset						Fly jib 63.0 ft offset						Fly jib 82.7 ft offset						Fly jib 102.4 ft offset						Fly jib 122.0 ft offset						
	0°		20°		40°		0°		20°		40°		0°		20°		40°		0°		20°		40°		0°		20°		40°		
	° ∠		° ∠		° ∠		° ∠		° ∠		° ∠		° ∠		° ∠		° ∠		° ∠		° ∠		° ∠		° ∠		° ∠		° ∠		
40	80	16.5					81	12.3					82	9.3																	40
45	79	16.5					80	12.3					81	9.3																	45
50	78	16.0					79	12.3					80	9.3					80	6.9											50
55	77	15.3	81	12.2			78	12.3					79	9.3					80	6.8					81	4.8					55
60	76	14.7	80	11.8			77	12.3					78	9.3					79	6.6					80	4.6					60
65	74	14.2	78	11.5			76	11.9					77	9.3					78	6.4					79	4.4					65
70	73	13.7	77	11.3	80	9.6	75	11.5	80	9.8			76	9.0					77	6.4					78	4.4					70
75	72	13.2	76	11.1	79	9.4	74	11.1	79	9.5			76	8.7					77	6.3					78	4.3					75
80	71	12.7	75	10.8	78	9.3	73	10.7	78	9.2			75	8.6	81	7.0			76	6.1					77	4.2					80
85	70	12.4	73	10.6	76	9.3	72	10.4	76	9.0			73	8.4	79	6.8			75	6.0					76	4.2					85
90	69	11.9	72	10.4	75	9.1	71	10.0	75	8.7	79	8.0	72	8.2	78	6.7			74	5.8					75	4.0					90
95	67	11.5	71	10.2	73	8.9	70	9.7	74	8.5	78	7.8	72	8.1	77	6.5			73	5.7	80	4.5			75	3.9					95
100	66	11.1	70	9.9	72	8.8	69	9.4	73	8.3	77	7.7	71	7.9	76	6.4	81	5.5	72	5.7	79	4.4			74	3.7					100
110	63	10.5	66	9.5	69	8.6	66	8.9	70	7.8	74	7.2	68	7.4	74	6.2	78	5.3	70	5.3	77	4.2			72	3.6	79	2.9			110
120	60	10.0	64	9.0	66	8.4	64	8.3	68	7.4	71	7.0	66	7.0	72	6.0	76	5.2	68	5.1	75	4.1	80	3.7	70	3.5	78	2.6			120
130	58	9.3	61	8.6	63	8.2	61	8.0	65	7.1	69	6.7	64	6.7	69	5.8	73	5.1	66	4.9	73	4.0	78	3.5	68	3.3	76	2.5			130
140	55	9.0	58	8.3	60	8.0	59	7.5	63	6.8	66	6.3	62	6.3	67	5.4	71	4.9	64	4.7	71	3.8	76	3.4	67	3.2	74	2.4			140
150	52	8.4	55	8.0	57	7.7	56	7.2	60	6.4	63	6.1	60	6.0	65	5.2	69	4.8	62	4.5	69	3.7	74	3.3	65	3.0	72	2.3			150
160	48	7.6	51	7.5	53	7.4	53	7.0	57	6.1	60	5.9	57	5.6	62	5.0	66	4.6	60	4.4	66	3.5	71	3.3	63	2.8	70	2.2			160
170	45	6.5	48	6.9	49	7.1	50	6.6	54	6.0	56	5.7	54	5.3	59	4.9	63	4.6	58	4.2	64	3.5	68	3.1	61	2.7	68	2.2			170
180	41	5.1	44	5.6	45	5.6	47	5.5	51	5.8	53	5.6	52	5.1	57	4.7	60	4.5	56	4.0	62	3.4	66	3.1	59	2.5					180
190	37	3.9	39	4.2	40	4.1	44	4.4	48	5.1	49	5.0	49	4.5	54	4.5	57	4.3	53	3.9	59	3.2	63	3.0	57	2.4					190
200			34	2.9	33	2.6	40	3.4	44	4.0	45	4.0	46	3.7	51	4.3	53	4.1	50	3.5	56	3.1	60	2.9	54	2.4					200
210							36	2.4	39	2.9	40	2.6	43	2.6	47	3.7	49	4.0	48	2.9	54	3.1	57	2.9	52	2.2					210
220																					50	2.9	53	2.9							220
230																															230
240																															240
250																															250
Telescoping sequence %																															
Tel. 1	93																														Tel. 1
Tel. 2	93																														Tel. 2
Tel. 3	93																														Tel. 3
Tel. 4	93																														Tel. 4
Tel. 5	93																														Tel. 5

Operation and maintenance of this machine must be in compliance with the information provided in the "Operation and Maintenance Manual" supplied with this machine.

Counterweight 81,570 lbs

Working Radius (ft)	Lifting capacities in 1,000 lbs according per SAE J765 on fly jib 43.3 ft / 63.0 ft / 82.7 ft / 102.4 ft / 122.0 ft On outriggers, 360° working area **Outrigger base 27.23 ft** Boom length 43.3 ft to 196.9 ft																														Working Radius (ft)
	Fly jib 43.3 ft offset						Fly jib 63.0 ft offset						Fly jib 82.7 ft offset						Fly jib 102.4 ft offset						Fly jib 122.0 ft offset						
	0°		20°		40°		0°		20°		40°		0°		20°		40°		0°		20°		40°		0°		20°		40°		
	° ∠		° ∠		° ∠		° ∠		° ∠		° ∠		° ∠		° ∠		° ∠		° ∠		° ∠		° ∠		° ∠		° ∠		° ∠		
40	81	13.9					81	10.6																							40
45	79	13.9					80	10.6																							45
50	78	13.9					79	10.6					81	7.9					82	6.2											50
55	78	13.9					79	10.6					80	7.9					81	6.2					81	4.5					55
60	77	13.9	80	11.7			78	10.6					79	7.9					80	6.2					80	4.4					60
65	75	13.8	79	11.5			77	10.6					78	7.9					79	6.2					79	4.2					65
70	74	12.8	78	11.2	80	9.6	76	10.6	80	9.4			77	7.9					78	6.0					78	4.2					70
75	74	12.4	77	10.9	79	9.4	75	10.4	80	9.1			76	7.9					77	6.0					78	4.1					75
80	73	12.0	76	10.7	78	9.2	74	10.1	79	8.8			75	7.9	81	6.8			76	5.9					77	4.0					80
85	71	11.5	74	10.4	77	9.0	73	9.7	77	8.6			74	7.9	80	6.6			75	5.7					76	4.0					85
90	70	11.1	73	10.0	76	9.0	72	9.4	76	8.3	80	7.6	73	7.9	79	6.5			74	5.6					75	3.8					90
95	69	10.8	72	9.7	75	8.9	71	9.2	75	8.1	79	7.4	73	7.7	78	6.4			74	5.5	81	4.4			75	3.7					95
100	68	10.5	71	9.4	74	8.8	70	8.9	74	7.8	78	7.2	72	7.4	77	6.3	82	5.5	73	5.5	80	4.4			74	3.7					100
110	65	10.0	68	9.1	70	8.4	67	8.4	72	7.3	75	6.9	69	7.1	75	6.0	79	5.3	71	5.1	77	4.2			72	3.5					110
120	62	9.4	66	8.5	68	8.1	65	7.9	69	7.0	73	6.6	68	6.6	73	5.9	77	5.2	70	5.0	76	4.0			71	3.3					120
130	60	8.9	63	8.2	65	7.8	63	7.5	67	6.7	70	6.2	65	6.2	71	5.6	75	5.1	67	4.9	73	4.0			69	3.1					130
140	57	8.4	60	7.9	62	7.6	61	7.2	65	6.3	68	6.0	63	5.9	69	5.2	73	4.9	66	4.7	72	3.8			68	3.1					140
150	54	8.0	57	7.5	59	7.3	58	6.9	62	6.1	65	5.9	61	5.6	67	5.0	70	4.8	64	4.5	70	3.7			66	3.0					150
160	51	7.4	54	7.2	56	7.0	55	6.5	59	5.9	62	5.6	59	5.4	64	4.8	67	4.6	62	4.4	67	3.5			64	2.8					160
170	48	6.2	51	6.9	52	6.8	53	6.2	57	5.7	59	5.3	56	5.1	61	4.6	65	4.4	60	4.2	65	3.3			62	2.7					170
180	45	4.9	47	5.4	48	5.6	50	5.2	54	5.4	56	5.1	54	4.9	59	4.5	62	4.3	58	4.0	63	3.1			61	2.6					180
190	41	3.8	44	4.1	44	4.2	47	4.1	51	4.8	53	4.9	52	4.4	56	4.3	59	4.1	56	3.9	61	3.1			59	2.5					190
200	37	2.8	39	2.9	39	2.9	44	2.9	47	3.9	49	4.2	49	3.7	53	4.0	56	3.9	53	3.5	58	3.0			54	2.4					200
210									44	2.9	44	2.9	46	2.6	50	3.3	53	3.7	51	2.6	56	2.9			49	2.4					210
220																	48	2.7			53	2.7									220
230																															230
240																															240
250																															250
Telescoping sequence %																															
Tel. 1	100																														Tel. 1
Tel. 2	100																														Tel. 2
Tel. 3	100																														Tel. 3
Tel. 4	100																														Tel. 4
Tel. 5	100																														Tel. 5

Operation and maintenance of this machine must be in compliance with the information provided in the "Operation and Maintenance Manual" supplied with this machine.

Counterweight 81,570 lbs

Lifting capacities in 1,000 lbs according per SAE J765 on fly jib 17.72 ft
On outriggers, 360° working area
Outrigger base 18.37 ft

Working Radius (ft)	Boom length 43.3 ft						Boom length 43.3 ft to 186.0 ft						Boom length 43.3 ft to 196.9 ft						Working Radius (ft)
	Fly jib 17.72 ft offset						Fly jib 17.72 ft offset						Fly jib 17.72 ft offset						
	0°		20°		40°		5°		20°		40°		5°		20°		40°		
	∠°		∠°		∠°		∠°		∠°		∠°		∠°		∠°		∠°		
10	76	72.8																	10
12	74	68.7	79	51.4															12
14	72	65.7	77	49.3															14
16	70	63.0	75	47.9	79	40.3													16
18	68	60.0	74	46.4	78	39.8													18
20	66	57.0	72	45.0	76	39.4													20
25	61	51.8	66	42.6	70	38.2													25
30	55	47.3	60	40.6	63	37.2													30
35	49	43.9	54	38.9	57	37.0	80	23.0											35
40	42	41.2	47	37.8	50	37.0	79	21.9	81	20.2			80	20.4					40
45	34	39.0	39	37.2			78	20.9	79	19.3			79	19.4	80	18.0			45
50	22	37.6					77	19.9	78	18.5	80	17.5	78	18.5	79	17.3	80	16.4	50
55							75	19.1	77	17.7	78	16.9	76	17.7	78	16.6	79	15.8	55
60							74	18.4	76	17.1	77	16.4	75	17.1	77	16.0	78	15.3	60
65							73	17.5	74	16.6	75	15.9	74	16.4	75	15.5	76	14.8	65
70							72	16.8	73	16.1	74	15.4	73	15.7	74	15.0	75	14.3	70
75							70	16.3	71	15.6	72	14.9	71	15.1	73	14.5	74	13.9	75
80							69	15.7	70	15.1	71	14.5	70	14.6	72	14.0	73	13.6	80
85							67	15.0	69	14.6	69	14.1	69	14.1	70	13.5	71	13.2	85
90							66	14.2	68	14.1	68	13.8	68	13.6	69	13.1	70	12.9	90
95							64	12.9	66	13.3	66	13.4	66	12.6	67	12.7	68	12.5	95
100							63	11.4	64	12.1	65	12.5	65	11.3	66	11.9	67	11.9	100
110							59	8.9	60	9.4	61	9.7	61	8.7	63	9.4	63	9.7	110
120							56	6.7	57	7.1	58	7.3	58	6.7	59	7.1	60	7.3	120
130							53	5.0	54	5.3	54	5.5	55	4.8	56	5.3	57	5.5	130
140							49	3.5	50	3.7	51	4.0	52	3.5	53	3.7	54	4.0	140
150																			150
160																			160
170																			170
180																			180
190																			190
200																			200
Telescoping sequence %																			
Tel. 1	0						93						100						Tel. 1
Tel. 2	0						93						100						Tel. 2
Tel. 3	0						93						100						Tel. 3
Tel. 4	0						93						100						Tel. 4
Tel. 5	0						93						100						Tel. 5

Operation and maintenance of this machine must be in compliance with the information provided in the "Operation and Maintenance Manual" supplied with this machine.

Radius (ft)	Boom length 43.3 ft to 186.0 ft																														Radius (ft)
	Fly jib 43.3 ft offset						Fly jib 63.0 ft offset						Fly jib 82.7 ft offset						Fly jib 102.4 ft offset						Fly jib 122.0 ft offset						
	0°		20°		40°		0°		20°		40°		0°		20°		40°		0°		20°		40°		0°		20°		40°		
	° ∠		° ∠		° ∠		° ∠		° ∠		° ∠		° ∠		° ∠		° ∠		° ∠		° ∠		° ∠		° ∠		° ∠		° ∠		
40	80	16.5					81	12.3					82	9.3																	40
45	79	16.5					80	12.3					81	9.3																	45
50	78	16.0					79	12.3					80	9.3					80	6.9											50
55	77	15.3	81	12.2			78	12.3					79	9.3					80	6.8					81	4.8					55
60	76	14.7	80	11.8			77	12.3					78	9.3					79	6.6					80	4.6					60
65	74	14.2	78	11.5			76	11.9					77	9.3					78	6.4					79	4.4					65
70	73	13.7	77	11.3	80	9.6	75	11.5	80	9.8			76	9.0					77	6.4					78	4.4					70
75	72	13.2	76	11.1	79	9.4	74	11.1	79	9.5			76	8.7					77	6.3					78	4.3					75
80	71	12.7	75	10.8	78	9.3	73	10.7	78	9.2			75	8.6	81	7.0			76	6.1					77	4.2					80
85	70	12.4	73	10.6	76	9.3	72	10.4	76	9.0			73	8.4	79	6.8			75	6.0					76	4.2					85
90	69	11.9	72	10.4	75	9.1	71	10.0	75	8.7	79	8.0	72	8.2	78	6.7			74	5.8					75	4.0					90
95	67	11.5	71	10.2	73	8.9	70	9.7	74	8.5	78	7.8	72	8.1	77	6.5			73	5.7	80	4.5			75	3.9					95
100	66	11.1	70	9.9	72	8.8	69	9.4	73	8.3	77	7.7	71	7.9	76	6.4	81	5.5	72	5.7	79	4.4			74	3.7					100
110	63	9.8	66	9.5	69	8.6	66	8.9	70	7.8	74	7.2	68	7.4	74	6.2	78	5.3	70	5.3	77	4.2			72	3.6					110
120	60	7.8	64	8.7	66	8.4	64	8.1	68	7.4	71	7.0	66	7.0	72	6.0	76	5.2	68	5.1	75	4.1			70	3.5					120
130	58	6.1	61	7.0	63	7.7	61	6.6	65	7.1	69	6.7	64	6.7	69	5.8	73	5.1	66	4.9	73	4.0			68	3.3					130
140	55	4.6	58	5.5	60	6.0	59	5.1	63	6.2	66	6.3	62	5.3	67	5.4	71	4.9	64	4.7	71	3.8									140
150	52	3.1	55	4.0	57	4.5	56	3.6	60	5.0	63	5.5	60	3.8	65	5.0	69	4.8	62	4.1	69	3.7									150
160					53	3.2			57	3.6	60	4.3			62	4.5	66	4.5	60	3.1	66	3.5									160
170																	63	4.0			64	3.5									170
180																															180
190																															190
200																															200
210																															210
220																															220
230																															230
240																															240
250																															250
Telescoping sequence %																															
Tel. 1	93																														Tel. 1
Tel. 2	93																														Tel. 2
Tel. 3	93																														Tel. 3
Tel. 4	93																														Tel. 4
Tel. 5	93																														Tel. 5

Operation and maintenance of this machine must be in compliance with the information provided in the "Operation and Maintenance Manual" supplied with this machine.

Counterweight 81,570 lbs

Working Radius (ft)	Lifting capacities in 1,000 lbs according per SAE J765 on fly jib 43.3 ft / 63.0 ft / 82.7 ft / 102.4 ft / 122.0 ft On outriggers, 360° working area **Outrigger base 18.37 ft** Boom length 43.3 ft to 196.9 ft																														Working Radius (ft)
	Fly jib 43.3 ft offset						Fly jib 63.0 ft offset						Fly jib 82.7 ft offset						Fly jib 102.4 ft offset						Fly jib 122.0 ft offset						
	0°		20°		40°		0°		20°		40°		0°		20°		40°		0°		20°		40°		0°		20°		40°		
	° ∠		° ∠		° ∠		° ∠		° ∠		° ∠		° ∠		° ∠		° ∠		° ∠		° ∠		° ∠		° ∠		° ∠		° ∠		
40	81	13.9					81	10.6																							40
45	79	13.9					80	10.6																							45
50	78	13.9					79	10.6					81	7.9					82	6.2											50
55	78	13.9					79	10.6					80	7.9					81	6.2					81	4.5					55
60	77	13.9	80	11.7			78	10.6					79	7.9					80	6.2					80	4.4					60
65	75	13.8	79	11.5			77	10.6					78	7.9					79	6.2					79	4.2					65
70	74	12.8	78	11.2	80	9.6	76	10.6	80	9.4			77	7.9					78	6.0					78	4.2					70
75	74	12.4	77	10.9	79	9.4	75	10.4	80	9.1			76	7.9					77	6.0					78	4.1					75
80	73	12.0	76	10.7	78	9.2	74	10.1	79	8.8			75	7.9	81	6.8			76	5.9					77	4.0					80
85	71	11.5	74	10.4	77	9.0	73	9.7	77	8.6			74	7.9	80	6.6			75	5.7					76	4.0					85
90	70	11.1	73	10.0	76	9.0	72	9.4	76	8.3	80	7.6	73	7.9	79	6.5			74	5.6					75	3.8					90
95	69	10.8	72	9.7	75	8.9	71	9.2	75	8.1	79	7.4	73	7.7	78	6.4			74	5.5	81	4.4			75	3.7					95
100	68	10.5	71	9.4	74	8.8	70	8.9	74	7.8	78	7.2	72	7.4	77	6.3	82	5.5	73	5.5	80	4.4			74	3.7					100
110	65	9.6	68	9.1	70	8.4	67	8.4	72	7.3	75	6.9	69	7.1	75	6.0	79	5.3	71	5.1	77	4.2			72	3.5					110
120	62	7.8	66	8.4	68	8.1	65	7.7	69	7.0	73	6.6	68	6.6	73	5.9	77	5.2	70	5.0	76	4.0			71	3.3					120
130	60	5.9	63	7.0	65	7.6	63	6.4	67	6.7	70	6.2	65	6.2	71	5.6	75	5.1	67	4.9	73	4.0			69	3.1					130
140	57	4.4	60	5.5	62	6.0	61	4.8	65	5.9	68	6.0	63	5.1	69	5.2	73	4.9	66	4.7	72	3.8									140
150	54	2.9	57	4.0	59	4.5	58	3.3	62	4.8	65	5.4	61	4.0	67	4.9	70	4.8	64	4.0	70	3.7									150
160					56	3.2			59	3.4	62	4.4			64	4.5	67	4.5	62	2.8	67	3.5									160
170																	65	4.0			65	3.3									170
180																															180
190																															190
200																															200
210																															210
220																															220
230																															230
240																															240
250																															250
Telescoping sequence %																															
Tel. 1	100																														Tel. 1
Tel. 2	100																														Tel. 2
Tel. 3	100																														Tel. 3
Tel. 4	100																														Tel. 4
Tel. 5	100																														Tel. 5

Operation and maintenance of this machine must be in compliance with the information provided in the "Operation and Maintenance Manual" supplied with this machine.

Radius (ft)	Boom length 43.3 ft						Boom length 43.3 ft to 186.0 ft						Boom length 43.3 ft to 196.9 ft						Radius (ft)
	Fly jib 17.72 ft offset						Fly jib 17.72 ft offset						Fly jib 17.72 ft offset						
	0°		20°		40°		5°		20°		40°		5°		20°		40°		
	° ∠		° ∠		° ∠		° ∠		° ∠		° ∠		° ∠		° ∠		° ∠		
10	76	72.8																	10
12	74	68.7	79	51.4															12
14	72	65.7	77	49.3															14
16	70	63.0	75	47.9	79	40.3													16
18	68	60.0	74	46.4	78	39.8													18
20	66	57.0	72	45.0	76	39.4													20
25	61	51.8	66	42.6	70	38.2													25
30	55	47.3	60	40.6	63	37.2													30
35	49	43.9	54	38.9	57	37.0	80	23.0											35
40	42	41.2	47	37.8	50	37.0	79	21.9	81	20.2			80	20.4					40
45	34	39.0	39	37.2			78	20.9	79	19.3			79	19.4	80	18.0			45
50	22	37.6					77	19.9	78	18.5	80	17.5	78	18.5	79	17.3	80	16.4	50
55							75	19.1	77	17.7	78	16.9	76	17.7	78	16.6	79	15.8	55
60							74	18.4	76	17.1	77	16.4	75	17.1	77	16.0	78	15.3	60
65							73	17.5	74	16.6	75	15.9	74	16.4	75	15.5	76	14.8	65
70							72	16.8	73	16.1	74	15.4	73	15.7	74	15.0	75	14.3	70
75							70	16.3	71	15.6	72	14.9	71	15.1	73	14.5	74	13.9	75
80							69	15.7	70	15.1	71	14.5	70	14.6	72	14.0	73	13.6	80
85							67	15.0	69	14.6	69	14.1	69	14.1	70	13.5	71	13.2	85
90							66	14.5	68	14.1	68	13.8	68	13.6	69	13.1	70	12.9	90
95							64	14.1	66	13.6	66	13.4	66	13.1	67	12.7	68	12.5	95
100							63	13.7	64	13.1	65	12.9	65	12.7	66	12.2	67	12.0	100
110							59	12.0	60	12.4	61	12.2	61	11.8	63	11.6	63	11.3	110
120							56	9.5	57	10.0	58	10.5	58	9.5	59	10.0	60	10.5	120
130							53	7.3	54	7.8	54	8.0	55	7.3	56	7.8	57	8.0	130
140							49	5.6	50	5.9	51	6.1	52	5.6	53	5.9	54	6.1	140
150							45	4.0	46	4.2	46	4.3	49	4.0	50	4.2	50	4.4	150
160																			160
Telescoping sequence %																			
Tel. 1	0						93						100						Tel. 1
Tel. 2	0						93						100						Tel. 2
Tel. 3	0						93						100						Tel. 3
Tel. 4	0						93						100						Tel. 4
Tel. 5	0						93						100						Tel. 5

Operation and maintenance of this machine must be in compliance with the information provided in the "Operation and Maintenance Manual" supplied with this machine.

Counterweight 55,115 lbs

Working Radius (ft)	Lifting capacities in 1,000 lbs according per SAE J765 on fly jib 17.72 ft On outriggers, 360° working area **Outrigger base 18.37 ft**																		Working Radius (ft)
	Boom length 43.3 ft						Boom length 43.3 ft to 186.0 ft						Boom length 43.3 ft to 196.9 ft						
	Fly jib 17.72 ft offset						Fly jib 17.72 ft offset						Fly jib 17.72 ft offset						
	0°		20°		40°		5°		20°		40°		5°		20°		40°		
	° ∠		° ∠		° ∠		° ∠		° ∠		° ∠		° ∠		° ∠		° ∠		
10	76	72.8																	10
12	74	68.7	79	51.4															12
14	72	65.7	77	49.3															14
16	70	63.0	75	47.9	79	40.3													16
18	68	60.0	74	46.4	78	39.8													18
20	66	57.0	72	45.0	76	39.4													20
25	61	51.8	66	42.6	70	38.2													25
30	55	47.3	60	40.6	63	37.2													30
35	49	43.9	54	38.9	57	37.0	80	23.0											35
40	42	41.2	47	37.8	50	37.0	79	21.9	81	20.2			80	20.4					40
45	34	39.0	39	37.2			78	20.9	79	19.3			79	19.4	80	18.0			45
50	22	33.4					77	19.9	78	18.5	80	17.5	78	18.5	79	17.3	80	16.4	50
55							75	19.1	77	17.7	78	16.9	76	17.7	78	16.6	79	15.8	55
60							74	18.4	76	17.1	77	16.4	75	17.1	77	16.0	78	15.3	60
65							73	17.5	74	16.6	75	15.9	74	16.4	75	15.5	76	14.8	65
70							72	15.8	73	16.1	74	15.4	73	15.1	74	15.0	75	14.3	70
75							70	13.9	71	14.8	72	14.8	71	13.6	73	14.1	74	13.9	75
80							69	12.2	70	13.1	71	13.9	70	12.0	72	12.8	73	13.3	80
85							67	10.7	69	11.6	69	12.2	69	10.5	70	11.3	71	12.0	85
90							66	9.2	68	10.0	68	10.5	68	9.1	69	9.8	70	10.5	90
95							64	7.8	66	8.5	66	9.0	66	7.8	67	8.4	68	9.1	95
100							63	6.5	64	7.1	65	7.6	65	6.5	66	7.1	67	7.7	100
110							59	4.5	60	4.9	61	5.4	61	4.5	63	4.9	63	5.4	110
120									57	3.2	58	3.4			59	3.2	60	3.4	120
130																			130
140																			140
150																			150
160																			160
Telescoping sequence %																			
Tel. 1	0						93						100						Tel. 1
Tel. 2	0						93						100						Tel. 2
Tel. 3	0						93						100						Tel. 3
Tel. 4	0						93						100						Tel. 4
Tel. 5	0						93						100						Tel. 5

Lifting capacities in 1,000 lbs according per SAE J765 on fly jib 43.3 ft

On outriggers, 360° working area

Outrigger base 18.37 ft

Working Radius (ft)	Boom length 43.3 ft to 186.0 ft						Boom length 43.3 ft to 196.9 ft						Working Radius (ft)
	Fly jib 43.3 ft offset						Fly jib 43.3 ft offset						
	0°		20°		40°		0°		20°		40°		
	∠°		∠°		∠°		∠°		∠°		∠°		
40	80	16.5					81	13.9					40
45	79	16.5					79	13.9					45
50	78	16.0					78	13.9					50
55	77	15.3	81	12.2			78	13.9					55
60	76	14.7	80	11.8			77	13.8	80	11.7			60
65	74	14.2	78	11.5			75	13.3	79	11.5			65
70	73	13.7	77	11.3	80	9.6	74	12.8	78	11.2	80	9.6	70
75	72	13.2	76	11.1	79	9.4	74	12.4	77	10.9	79	9.4	75
80	71	12.4	75	10.8	78	9.3	73	11.8	76	10.7	78	9.2	80
85	70	10.9	73	10.6	76	9.3	71	10.4	74	10.4	77	9.0	85
90	69	9.5	72	10.4	75	9.1	70	9.3	73	10.0	76	9.0	90
95	67	8.4	71	9.8	73	8.9	69	8.1	72	9.5	75	8.9	95
100	66	7.4	70	8.9	72	8.8	68	7.0	71	8.7	74	8.8	100
110	63	5.4	66	6.9	69	8.0	65	5.1	68	6.7	70	7.9	110
120	60	3.9	64	5.0	66	5.9	62	3.5	66	5.0	68	5.9	120
130			61	3.5	63	4.2			63	3.5	65	4.2	130
140													140
150													150
160													160
170													170
180													180
190													190
200													200
210													210
220													220
Telescoping sequence %													
Tel. 1	93						100						Tel. 1
Tel. 2	93						100						Tel. 2
Tel. 3	93						100						Tel. 3
Tel. 4	93						100						Tel. 4
Tel. 5	93						100						Tel. 5

Operation and maintenance of this machine must be in compliance with the information provided in the "Operation and Maintenance Manual" supplied with this machine.

Radius (ft)	Boom length 43.3 ft to 186.0 ft																														Radius (ft)
	Fly jib 43.3 ft offset						Fly jib 63.0 ft offset						Fly jib 82.7 ft offset						Fly jib 102.4 ft offset						Fly jib 122.0 ft offset						
	0°		20°		40°		0°		20°		40°		0°		20°		40°		0°		20°		40°		0°		20°		40°		
	° ∠		° ∠		° ∠		° ∠		° ∠		° ∠		° ∠		° ∠		° ∠		° ∠		° ∠		° ∠		° ∠		° ∠		° ∠		
40	80	16.5					81	12.3					82	9.3																	40
45	79	16.5					80	12.3					81	9.3																	45
50	78	16.0					79	12.3					80	9.3					80	6.9											50
55	77	15.3	81	12.2			78	12.3					79	9.3					80	6.8					81	4.8					55
60	76	14.7	80	11.8			77	12.3					78	9.3					79	6.6					80	4.6					60
65	74	14.2	78	11.5			76	11.9					77	9.3					78	6.4					79	4.4					65
70	73	13.7	77	11.3	80	9.6	75	11.5	80	9.8			76	9.0					77	6.4					78	4.4					70
75	72	13.2	76	11.1	79	9.4	74	11.1	79	9.5			76	8.7					77	6.3					78	4.3					75
80	71	12.7	75	10.8	78	9.3	73	10.7	78	9.2			75	8.6	81	7.0			76	6.1					77	4.2					80
85	70	12.4	73	10.6	76	9.3	72	10.4	76	9.0			73	8.4	79	6.8			75	6.0					76	4.2					85
90	69	11.9	72	10.4	75	9.1	71	10.0	75	8.7	79	8.0	72	8.2	78	6.7			74	5.8					75	4.0					90
95	67	11.5	71	10.2	73	8.9	70	9.7	74	8.5	78	7.8	72	8.1	77	6.5			73	5.7	80	4.5			75	3.9					95
100	66	11.1	70	9.9	72	8.8	69	9.4	73	8.3	77	7.7	71	7.9	76	6.4	81	5.5	72	5.7	79	4.4			74	3.7					100
110	63	10.5	66	9.5	69	8.6	66	8.9	70	7.8	74	7.2	68	7.4	74	6.2	78	5.3	70	5.3	77	4.2			72	3.6	79	2.9			110
120	60	10.0	64	9.0	66	8.4	64	8.3	68	7.4	71	7.0	66	7.0	72	6.0	76	5.2	68	5.1	75	4.1	80	3.7	70	3.5	78	2.6			120
130	58	8.8	61	8.6	63	8.2	61	8.0	65	7.1	69	6.7	64	6.7	69	5.8	73	5.1	66	4.9	73	4.0	78	3.5	68	3.3	76	2.5			130
140	55	7.0	58	7.6	60	7.7	59	7.1	63	6.8	66	6.3	62	6.3	67	5.4	71	4.9	64	4.7	71	3.8	76	3.4	67	3.2	74	2.4			140
150	52	5.3	55	6.1	57	6.5	56	5.8	60	6.2	63	6.1	60	5.7	65	5.2	69	4.8	62	4.5	69	3.7	74	3.3	65	3.0	72	2.3			150
160	48	3.9	51	4.5	53	4.9	53	4.3	57	5.4	60	5.7	57	4.7	62	5.0	66	4.6	60	4.3	66	3.5	71	3.3	63	2.8	70	2.2			160
170	45	2.5	48	3.2	49	3.4	50	2.9	54	4.3	56	4.7	54	3.4	59	4.9	63	4.6	58	3.8	64	3.5	68	3.1	61	2.7	68	2.2			170
180									51	2.9	53	3.4			57	3.6	60	4.2			62	3.4	66	3.1	59	2.5					180
190																	57	3.2			59	2.9	63	3.0							190
200																							60	2.8							200
210																															210
220																															220
230																															230
240																															240
250																															250
Telescoping sequence %																															
Tel. 1	93																														Tel. 1
Tel. 2	93																														Tel. 2
Tel. 3	93																														Tel. 3
Tel. 4	93																														Tel. 4
Tel. 5	93																														Tel. 5

Operation and maintenance of this machine must be in compliance with the information provided in the "Operation and Maintenance Manual" supplied with this machine.

Counterweight 55,115 lbs

Working Radius (ft)	Lifting capacities in 1,000 lbs according per SAE J765 on fly jib 43.3 ft / 63.0 ft / 82.7 ft / 102.4 ft / 122.0 ft On outriggers, 360° working area **Outrigger base 27.23 ft** Boom length 43.3 ft to 196.9 ft																														Working Radius (ft)
	Fly jib 43.3 ft offset						Fly jib 63.0 ft offset						Fly jib 82.7 ft offset						Fly jib 102.4 ft offset						Fly jib 122.0 ft offset						
	0°		20°		40°		0°		20°		40°		0°		20°		40°		0°		20°		40°		0°		20°		40°		
	° ∠		° ∠		° ∠		° ∠		° ∠		° ∠		° ∠		° ∠		° ∠		° ∠		° ∠		° ∠		° ∠		° ∠		° ∠		
40	81	13.9					81	10.6																							40
45	79	13.9					80	10.6																							45
50	78	13.9					79	10.6					81	7.9					82	6.2											50
55	78	13.9					79	10.6					80	7.9					81	6.2					81	4.5					55
60	77	13.9	80	11.7			78	10.6					79	7.9					80	6.2					80	4.4					60
65	75	13.8	79	11.5			77	10.6					78	7.9					79	6.2					79	4.2					65
70	74	12.8	78	11.2	80	9.6	76	10.6	80	9.4			77	7.9					78	6.0					78	4.2					70
75	74	12.4	77	10.9	79	9.4	75	10.4	80	9.1			76	7.9					77	6.0					78	4.1					75
80	73	12.0	76	10.7	78	9.2	74	10.1	79	8.8			75	7.9	81	6.8			76	5.9					77	4.0					80
85	71	11.5	74	10.4	77	9.0	73	9.7	77	8.6			74	7.9	80	6.6			75	5.7					76	4.0					85
90	70	11.1	73	10.0	76	9.0	72	9.4	76	8.3	80	7.6	73	7.9	79	6.5			74	5.6					75	3.8					90
95	69	10.8	72	9.7	75	8.9	71	9.2	75	8.1	79	7.4	73	7.7	78	6.4			74	5.5	81	4.4			75	3.7					95
100	68	10.5	71	9.4	74	8.8	70	8.9	74	7.8	78	7.2	72	7.4	77	6.3	82	5.5	73	5.5	80	4.4			74	3.7					100
110	65	10.0	68	9.1	70	8.4	67	8.4	72	7.3	75	6.9	69	7.1	75	6.0	79	5.3	71	5.1	77	4.2			72	3.5					110
120	62	9.4	66	8.5	68	8.1	65	7.9	69	7.0	73	6.6	68	6.6	73	5.9	77	5.2	70	5.0	76	4.0			71	3.3					120
130	60	8.3	63	8.2	65	7.8	63	7.5	67	6.7	70	6.2	65	6.2	71	5.6	75	5.1	67	4.9	73	4.0			69	3.1					130
140	57	6.5	60	7.4	62	7.6	61	6.8	65	6.3	68	6.0	63	5.9	69	5.2	73	4.9	66	4.7	72	3.8			68	3.1					140
150	54	5.1	57	6.1	59	6.5	58	5.5	62	6.0	65	5.9	61	5.4	67	5.0	70	4.8	64	4.5	70	3.7			66	3.0					150
160	51	3.9	54	4.5	56	4.9	55	4.1	59	5.4	62	5.5	59	4.5	64	4.8	67	4.6	62	4.2	67	3.5			64	2.8					160
170	48	2.5	51	3.2	52	3.4	53	2.9	57	4.0	59	4.7	56	3.2	61	4.6	65	4.4	60	3.4	65	3.3			62	2.7					170
180									54	2.9	56	3.4			59	3.5	62	4.1			63	3.1									180
190																	59	3.2			61	2.8									190
200																															200
210																															210
220																															220
230																															230
240																															240
250																															250
Telescoping sequence %																															
Tel. 1	100																														Tel. 1
Tel. 2	100																														Tel. 2
Tel. 3	100																														Tel. 3
Tel. 4	100																														Tel. 4
Tel. 5	100																														Tel. 5

Operation and maintenance of this machine must be in compliance with the information provided in the "Operation and Maintenance Manual" supplied with this machine.

Working Radius (ft)	Lifting capacities in 1,000 lbs according per SAE J765 on fly jib 17.72 ft On outriggers, 360° working area **Outrigger base 27.23 ft**																		Working Radius (ft)
	Boom length 43.3 ft						Boom length 43.3 ft to 186.0 ft						Boom length 43.3 ft to 196.9 ft						
	Fly jib 17.72 ft offset						Fly jib 17.72 ft offset						Fly jib 17.72 ft offset						
	0°		20°		40°		5°		20°		40°		5°		20°		40°		
	° ∠		° ∠		° ∠		° ∠		° ∠		° ∠		° ∠		° ∠		° ∠		
10	76	72.8																	10
12	74	68.7	79	51.4															12
14	72	65.7	77	49.3															14
16	70	63.0	75	47.9	79	40.3													16
18	68	60.0	74	46.4	78	39.8													18
20	66	57.0	72	45.0	76	39.4													20
25	61	51.8	66	42.6	70	38.2													25
30	55	47.3	60	40.6	63	37.2													30
35	49	43.9	54	38.9	57	37.0	80	23.0											35
40	42	41.2	47	37.8	50	37.0	79	21.9	81	20.2			80	20.4					40
45	34	39.0	39	37.2			78	20.9	79	19.3			79	19.4	80	18.0			45
50	22	37.6					77	19.9	78	18.5	80	17.5	78	18.5	79	17.3	80	16.4	50
55							75	19.1	77	17.7	78	16.9	76	17.7	78	16.6	79	15.8	55
60							74	18.4	76	17.1	77	16.4	75	17.1	77	16.0	78	15.3	60
65							73	17.5	74	16.6	75	15.9	74	16.4	75	15.5	76	14.8	65
70							72	16.8	73	16.1	74	15.4	73	15.7	74	15.0	75	14.3	70
75							70	16.3	71	15.6	72	14.9	71	15.1	73	14.5	74	13.9	75
80							69	15.5	70	15.1	71	14.5	70	14.6	72	14.0	73	13.6	80
85							67	14.0	69	14.6	69	14.1	69	13.9	70	13.5	71	13.2	85
90							66	12.2	68	12.8	68	13.2	68	12.2	69	12.5	70	12.9	90
95							64	10.4	66	11.1	66	11.6	66	10.4	67	11.1	68	11.6	95
100							63	8.8	64	9.4	65	9.9	65	8.8	66	9.4	67	9.9	100
110							59	6.1	60	6.9	61	7.3	61	6.1	63	6.9	63	7.3	110
120							56	4.0	57	4.7	58	5.0	58	4.0	59	4.7	60	5.0	120
130									54	2.9	54	3.1			56	2.9	57	3.1	130
140																			140
150																			150
Telescoping sequence %																			
Tel. 1	0						93						100						Tel. 1
Tel. 2	0						93						100						Tel. 2
Tel. 3	0						93						100						Tel. 3
Tel. 4	0						93						100						Tel. 4
Tel. 5	0						93						100						Tel. 5

Operation and maintenance of this machine must be in compliance with the information provided in the "Operation and Maintenance Manual" supplied with this machine.

Counterweight 28,660 lbs

Working Radius (ft)	Lifting capacities in 1,000 lbs according per SAE J765 on fly jib 43.3 ft On outriggers, 360° working area **Outrigger base 27.23 ft**												Working Radius (ft)
	Boom length 43.3 ft to 186.0 ft						Boom length 43.3 ft to 196.9 ft						
	Fly jib 43.3 ft offset						Fly jib 43.3 ft offset						
	0°		20°		40°		0°		20°		40°		
	° ∠		° ∠		° ∠		° ∠		° ∠		° ∠		
40	80	16.5					81	13.9					40
45	79	16.5					79	13.9					45
50	78	16.0					78	13.9					50
55	77	15.3	81	12.2			78	13.9					55
60	76	14.7	80	11.8			77	13.8	80	11.7			60
65	74	14.2	78	11.5			75	13.3	79	11.5			65
70	73	13.7	77	11.3	80	9.6	74	12.8	78	11.2	80	9.6	70
75	72	13.2	76	11.1	79	9.4	74	12.4	77	10.9	79	9.4	75
80	71	12.7	75	10.8	78	9.3	73	12.0	76	10.7	78	9.2	80
85	70	12.4	73	10.6	76	9.3	71	11.5	74	10.4	77	9.0	85
90	69	11.9	72	10.4	75	9.1	70	11.1	73	10.0	76	9.0	90
95	67	11.2	71	10.2	73	8.9	69	10.7	72	9.7	75	8.9	95
100	66	10.2	70	9.9	72	8.8	68	10.0	71	9.4	74	8.8	100
110	63	7.5	66	9.0	69	8.6	65	7.5	68	8.8	70	8.4	110
120	60	5.4	64	6.7	66	7.8	62	5.2	66	6.7	68	7.6	120
130	58	3.6	61	4.8	63	5.6	60	3.5	63	4.8	65	5.5	130
140			58	3.3	60	3.8			60	3.2	62	3.8	140
150													150
Telescoping sequence %													
Tel. 1	93						100						Tel. 1
Tel. 2	93						100						Tel. 2
Tel. 3	93						100						Tel. 3
Tel. 4	93						100						Tel. 4
Tel. 5	93						100						Tel. 5

GENERAL

1. Total rated loadsshown on the TADANO load rating chart apply only to the machine as originally manufactured and normally equipped by TADANO. Modifications to the machine or use of optional equipment other than that specified can result in a reduction of capacity.
2. Hydraulic cranes can be hazardous if improperly operated or maintained. Operation and maintenance of this machine must be in compliance with the information in the ***Operation and Maintenance Manual*** supplied with the crane. If this manual is missing, order replacement through the distributor.
3. The operator and other personnel associated with this machine shall fully acquaint themselves with the latest applicable American National Standards Institute (ANSI) safety standards for cranes.

SET UP

1. Total rated loads shown on the TADANO load rating chart are the maximum allowable crane capacities. They are based on the machine standing level on firm supporting surface under ideal job conditions. Depending on the nature of the supporting surface, it may be necessary to have structural supports under the outrigger floats to spread the load to a larger bearing surface.
2. For on outrigger operation, outriggers shall be extended to the dimension according to the TADANO LOAD RATING CHART and secured by pins with tires free of supporting surface, before operating crane.
3. Working on tires are travelling with load is not allowed.
4. The weight of the auxiliary winch with 3,100 lbs is taken into account as a part of counterweight. Therefore the auxiliary winch must be attached always at the superstructure for crane operation.

OPERATION

1. Total rated loads with outriggers fully extended do not exceed 85% of the tipping loads. Total rated loads with outriggers half extended are determined from the formula:
   total rated load = (tipping load -0.1 tip reaction) / 1.25
2. The crane's structural steelwork is in accordance with DIN 15018, part 3. Design and construction of the crane comply with DIN 15018, part 2 and with F.E.M. regulations.
3. Total rated loads above the bold lines in the TADANO load rating chart are based on crane strength and those below the bold lines on crane stability.
4. Total rated loads include the weight of main hook block, auxiliary hook ball, sling and other auxiliary lifting devices and all their weights shall be subtracted from the listed capacities to obtain the net load to be lifted.

Hookball/ Hookblock(ton)	11.0	27.5	69.5	88.0	138.0	176.5
No. of sheaves	-	1	3	5	7	9
Weight (lbs.)	440	660	1,325	1,765	2,645	3,525

5. Total rated loads are based on freely suspended loads and make no allowance for such factors as the effect of wind, sudden stopping of loads, supporting surface conditions, operating speeds, side loads, etc. Side pull on boom or jib is extremely dangerous.
6. Total rated loads do not account for wind on lifted load or boom. Total rated loads and boom length shall be appropriately reduced, when wind velocity is above 18 mph (26 ft/sec.) for main boom operation and above 11 mph (16 ft/sec.) for jib operation.
7. Total rated loads at load radius shall not be exceeded. Do not tip the crane to determine allowable loads.
8. Do not operate at boom lengths beyond radii or boom angles where no capacities are shown. Crane may overturn without any load on the hook.
9. Slewing of the superstructure is admissible only when the crane is supported on half or fully extended outriggers.
10. The lifting capacity ratings specified in the TADANO load rating chart apply to the telescopic boom without fly jib fixed in transport position or working position.
    If the fly jib is secured to the telescopic boom in transport position or working position, the lifting capacities of the telescopic boom are reduced by the values specified below.
    The weight of the fly jib(3,350 lbs) is detected in terms of a load, and the load moment limiter will shut off earlier.

Load rating reduction (tons)									
Jib status	Boom length (ft)								
	43.3	71.9	100.4	114.8	143.3	157.5	171.9	186.0	196.8
17.7ft/43.3ft fly jib,mounted in transport position	0.66	0.33	0.24	0.20	0.20	0.17	0.17	0.13	0.11
17.7ft fly jib,mounted to the boom head	2.14	1.85	1.64	1.52	1.47	1.44	1.39	1.37	1.35
43.3ft fly jib,mounted to the boom head	2.92	2.37	2.04	1.82	1.74	1.69	1.65	1.65	1.63
63.0ft fly jib, mounted to the boom head	3.78	2.89	2.47	2.33	2.25	2.18	2.13	2.08	2.05
82.7ft fly jib,mounted to the boom head	4.54	3.27	2.89	2.76	2.66	2.57	2.49	2.44	2.39
102.4ft fly jib,mounted to the boom head	6.56	4.44	3.90	3.63	3.40	3.21	3.08	2.97	2.89
122.0ft fly jib,mounted to the boom head	8.49	6.45	5.34	4.59	4.17	3.86	3.59	3.37	3.28

11. When making lifts at a load radius not shown, use the next longer radius to determine allowable capacity.
12. Load per part line should not exceed 18,650 lbs. for the main winch and for the auxiliary winch.
13. Loaded boom angles are approximate. The boom angle before loading should be greater to account for deflection.
14. The 43.3ft boom length capacities are based on the telescoping boom being fully retracted. If not fully retracted (less than 57.7ft boom length),use the total rated loads for the 57.7ft boom length according to the telescoping sequence.
15. Extension or retraction of the telescopic boom with loads may be attempted within the limits of the TADANO LOAD RATING CHART. The ability to telescope loads is limited by hydraulic pressure, boom angle, boom length, crane maintenance, etc.
16. When erecting or stowing the fly jib, be sure to retain it by hand or by other means to prevent its free movement.
17. Use the Anti-Two Block (OVERWIND CUTOUT) disable switch when erecting or stowing the extendible fly jib and stowing the hook block. While the switch is pushed, the hoist will not stop, even when an overwind condition occurs.
18. The working radius specified in the TADANO LOAD RATING CHARTS for the fly jib apply only if the telescopic boom is extended according to the TADANO LOAD RATING CHARTS. If one or more elements of the telescopic boom are retracted partially or completely, the specified boom angles will be decisive in determining total rated lifting capacities.
19. When lifting a load by using the fly jib (auxiliary hoist) and telescopic boom (main hoist) simultaneously, do the following:
    A) Select the correct program for the load moment device in accordance with jib length, jib offset angle, counterweight and outrigger base.
    B) Before starting the operation, make sure that the weight of the load is within the total rated load for the fly jib.
19. Safe Load Indicator (S.L.I.)
    Before working with the telescopic boom or fly jib, make sure that the S.L.I. code is set according to the desired telescoping sequence while the telescopic boom is completely retracted. A change of the telescoping sequence is not permissible when the boom has been partially of fully extended. In order to change the S.L.I. code number, the boom must be fully retracted.
20. Working with Single Top
    Operation with the single top is allowed with the main winch and the auxiliary winch. The maximum allowed capacity is limited by the selected S.L.I. code for main boom operation according to existing counterweight and outrigger base at one side and by the single line pull which is limited by hydraulic pressure at the other side.
    For operations with the single top mounted, use the TADANO LOAD RATING CHART for the telescopic boom in accordance with existing counterweight and outrigger base to find the total rated lifting capacity and also select the correct S.L.I. code for the telescopic boom in accordance with the existing counterweight and outrigger base. Find the total rated lifting capacity based on boom length and working radius. From that value, subtract 1,100 lbs and the weights of all lifting equipment used including hook block, sling and other auxiliary lifting devices. The result (<total rated lifting capacity> - <1,100 lbs> - <lifting equipment>) is the total rated lifting capacity for a single top lift.

of the vertical hoist line or tackle with load applied.
The deflection of the boom due to its deadweight and the rated load are taken into account.

2. Loaded Boom Angle: The angle between the boom base section and the horizontal, after lifting the total rated loac at the working radius.
3. Working Area: Area measured in a circular arc about the centerline of rotation.
4. Freely Suspended Load: Load hanging free with no direct external force applied except by the hoist line.
5. Side Load: Horizontal side force applied to the lifted load either on the ground or in the air.

Load Rating Charts and Operating Instructions.
Sole reliance upon the Safe Load Indicator Aids in place of good operating practice can cause an accident. The operator must exercise caution to assure safety.

ATF160G-5 Axle weight distribution chart

1) Normal traveling condition

	GVW	Axle 1	Axle 2	Axle 3	Axle 4	Axle 5
Base machine with 16.00R25 tires, no counterweight, no fuel , no driver	124,067	24,430	24,617	26,460	24,360	24,200
Add: 1. 11.0 ton hook ball (in carrier storage)	662	-103	-103	0	433	433
2. 27.5 ton hook block in front	660	573	573	0	-243	-243
3. 69.4 ton hook block in front	1,324	1,147	1,147	0	-485	-485
4. 88.0 ton hook block in front	1,765	1,528	1,528	0	-646	-646
5. 138.0 ton hook block in front	2,645	2,291	2,291	0	-970	-970
6. 200.0 ton hook block at boom head	5,070	4,394	4,394	0	-1,858	-1,858
7. Boom extension (43.3ft) stored on main boom	3,351	1,741	1,741	0	-66	-66
8. Auxiliary winch with cable	3,043	-866	-866	0	2,388	2,388
9. Auxiliary boom point sheave (single top)	187	173	173	0	-80	-80
10. Air conditioning in carrier cab	102	71	71	0	-20	-20
11. Air conditioning in crane cab	106	7	7	0	47	47
12. Tool box at rear	143	-36	-36	0	108	108
13. Additional Hydraulic oil cooler	102	2	2	0	49	49
14. 20.5R25 tires in lieu of 16:00R25	1,035	207	207	207	207	207
15. Towing attachement(190 kN)	176	-44	-44	0	132	132
16. Air & electrical circuits to rear for boom dolly	25	-4	-4	0	17	17
17. Free swing & boom hoist circuit for boom dolly	82	3	3	0	39	39

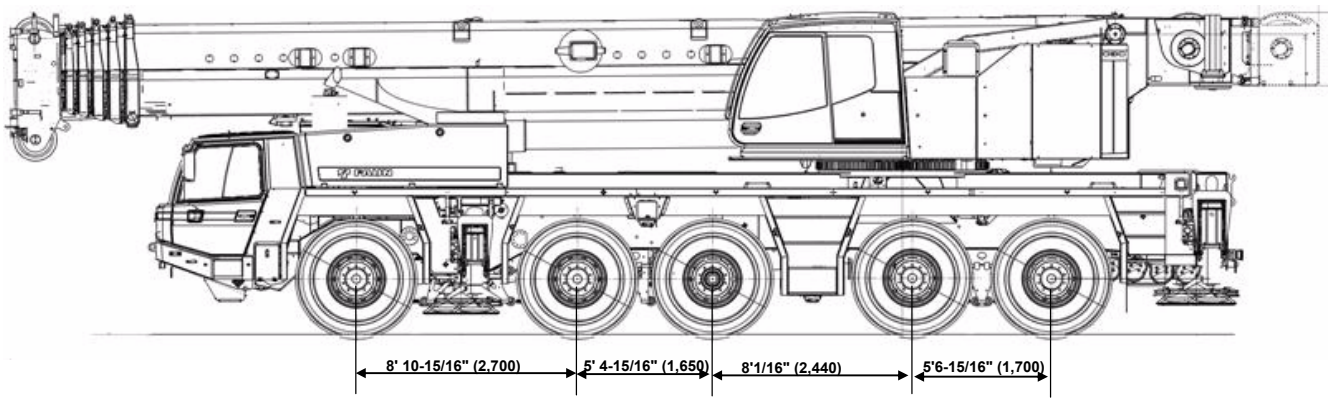

Base machine with 16.00R25 tires, no counterweight, no fuel, no driver	124,067	19,622	19,810	19,792	20,108	19,947	24,787
Add: 1. 11.0 ton hook ball (in carrier storage)	662	-103	-103	0	433	433	0
2. 27.5 ton hook block at boom head	660	0	0	0	0	0	660
3. 69.4 ton hook block at boom head	1,324	0	0	0	0	0	1,324
4. 88.0 ton hook block at boom head	1,765	0	0	0	0	0	1,765
5. 138.0 ton hook block at boom head	2,645	0	0	0	0	0	2,645
6. 200.0 ton hook block at boom head	5,070	0	0	0	0	0	5,070
7. Boom extension (43.3ft) stored on main boom	3,351	236	236	0	180	180	2,521
8. 19.69' intermediate sections for boom extension	884	0	0	0	0	0	884
9. Auxiliary winch with cable	3,043	1,335	1,335	0	187	187	0
10. Auxiliary boom point sheave (single top)	187	-12	-12	0	-9	-9	229
11. Air conditioning in carrier cab	102	71	71	0	-20	-20	0
12. Air conditioning in crane cab	106	10	10	0	43	43	0
13. Tool box at rear	143	-36	-36	0	108	108	0
14. Additional Hydraulic oil cooler	102	13	13	0	38	38	0
15. 20.5R25 tires in lieu of 16:00R25	1,035	207	207	207	207	207	0
16. Dolly brackets at boom	154	0	0	0	0	0	154
17. Towing attachement(190 kN)	176	-44	-44	0	132	132	0
18. Air & electrical circuits to rear for boom dolly	25	-4	-4	0	17	17	17
19. Free swing & boom hoist circuit for boom dolly	82	10	10	0	31	31	0

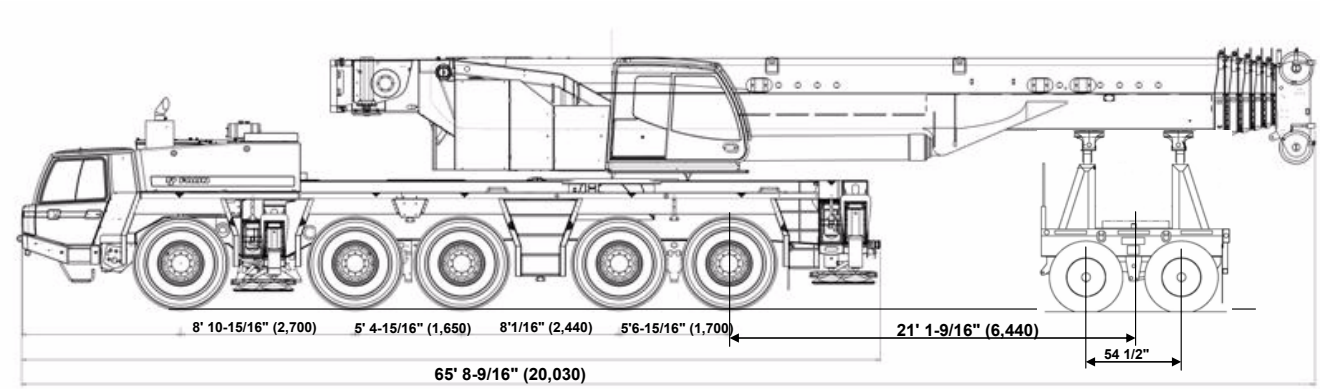

TADANO AMERICA CORPORATION
333 NORTHPARK CENTRAL DR, SUITE Z
HOUSTON, TEXAS 77073 U.S.A.
PHONE: (281) 869-0030 EXT.315
FAX: (281) 869-0040
Web site: www.tadanoamerica.com
E-mail: sales@tadano-cranes.com

Form No. TAC-ATF160G-5-050204