Technical Data
Caractéristiques techniques

LTM 1500

Mobile Crane
Grue automotrice

Telescopic boom
Flèche télescopique

max. 276 ft

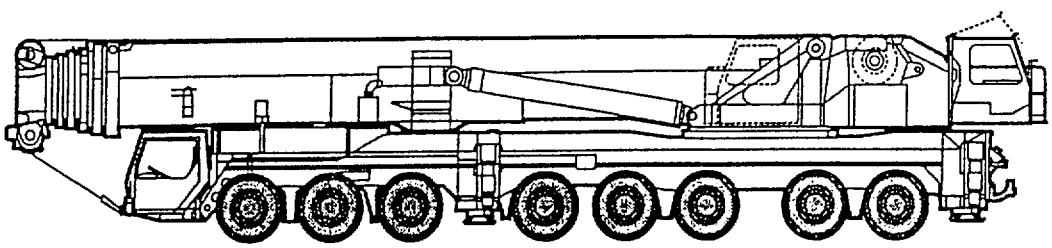

LIEBHERR

Table of Content

	page
Lifting capacities and lifting heights on 164 ft long telescopic boom (T)	3–7
Lifting capacities and lifting heights on 164 ft long, guyed telescopic boom (TA)	8–9
Lifting capacities and lifting heights on the lattice fly jib with 164 ft long telescopic boom (TF)	10–13
Lifting capacities and lifting heights on the lattice fly jib with 164 ft long, guyed telescopic boom (TAF)	14–17
Lifting capacities and lifting heights on the luffing lattice jib with 164 ft long telescopic boom (TN)	18–[illegible]
Lifting capacities and lifting heights on the luffing lattice jib with 164 ft long, guyed telescopic boom (TAN)	24–[illegible]
Lifting capacities and lifting heights on 276 ft long telescopic boom (T)	26–34
Lifting capacities and lifting heights on 276 ft long, guyed telescopic boom (TA)	35–37
Lifting capacities and lifting heights on the lattice fly jib with 276 ft long telescopic boom (TF)	38–42
Lifting capacities and lifting heights on the lattice fly jib with 276 ft long, guyed telescopic boom (TAF)	43–47
Lifting capacities and lifting heights on the luffing lattice jib with 276 ft long telescopic boom (TN)	48–55
Lifting capacities and lifting heights on the luffing lattice jib with 276 ft long, guyed telescopic boom (TAN)	56–58
Dimensions, weights and working speeds	59–61
Crane carrier, crane superstructure, complimentary equipment	62–63

Tables des matières

	page
Les forces de levage et hauteurs de levage à la flèche télescopique de 164 ft (T)	3–7
Les forces de levage et hauteurs de levage à la flèche télescopique haubanée de 164 ft (TA)	8–9
Les forces de levage et hauteurs de levage à la fléchette treillis fixe avec la flèche télescopique de 164 ft (TF)	10–13
Les forces de levage et hauteurs de levage à la fléchette treillis fixe avec la flèche télescopique haubanée de 164 ft (TAF)	14–17
Les forces de levage et hauteurs de levage à la fléchette treillis relevable avec la flèche télescopique de 164 ft (TN)	18–23
Les forces de levage et hauteurs de levage à la fléchette treillis relevable avec la flèche télescopique haubanée de 164 ft (TAN)	24–25
Les forces de levage et hauteurs de levage à la flèche télescopique de 276 ft (T)	26–34
Les forces de levage et hauteurs de levage à la flèche télescopique haubanée de 276 ft (TA)	35–37
Les forces de levage et hauteurs de levage à la fléchette treillis fixe avec la flèche télescopique de 276 ft (TF)	38–42
Les forces de levage et hauteurs de levage à la fléchette treillis fixe avec la flèche télescopique haubanée de 276 ft (TAF)	43–47
Les forces de levage et hauteurs de levage à la fléchette treillis relevable avec la flèche télescopique de 276 ft (TN)	48–[illegible]
Les forces de levage et hauteurs de levage à la fléchette treillis relevable avec la flèche télescopique haubanée de 276 ft (TAN)	56–58
Encombrement, poids et vitesses	59–61
Châssis porteur, partie tournante, equipement optionnel	62–63

Lifting capacities are given in kips (1,000 lbs).

Lifting capacities on 164 ft long telescopic boom.
Forces de levage à la flèche télescopique de 164 ft.

LTM 1500

53 ft – 164 ft | 32'10" x 31'6" | 360° | 330700 lbs | 85%

ft	53 ft			70 ft	87 ft	104 ft	121 ft	138 ft	155 ft	164 ft	ft
	**	**									
10	1081	1081	1081								10
11	947	947	947								11
12	830	830	830	568							12
13	729	729	729	556							13
14	656	656	651	545	520						14
15	602	601	590	534	504						15
16	595	586	567	524	490						16
17	581	568	546	515	478	402					17
18	560	548	526	505	466	392					18
20	521	510	488	485	442	373	316				20
22	488	478	456	453	422	355	303				22
24	458	448	427	424	401	339	291	249			24
26	431	420	400	399	379	324	280	239			26
28	408	392	376	376	357	310	271	231	201		28
30	386	365	354	353	336	296	261	223	194	176	30
32	365	342	333	333	320	283	250	215	188	170	32
34	345	322	315	315	305	271	240	208	182	165	34
36	326	304	299	299	290	260	230	201	176	159	36
38	307	287	283	283	276	248	220	194	171	154	38
40	290	270	268	268	262	238	211	188	165	149	40
45	256	238	238	239	231	218	194	173	153	138	45
50				215	207	198	178	160	141	128	50
55				193	187	180	164	147	131	119	55
60				173	170	164	151	136	122	111	60
65				150	158	150	139	125	114	104	65
70					145	137	131	118	107	96	70
75					133	125	124	111	100	89	75
80						118	117	106	94	82.5	80
85						111	109	100	89	77.5	85
90						103	101	95.5	84.5	73	90
95						96.5	93.5	90.5	80	68.5	95
100							87	86	75.5	64.5	100
105							81	81	71	60.5	105
110							76	76	68	57.6	110
115								71.5	65.5	55	115
120								67	62.5	52.5	120
125								63	59.9	50.1	125
130								59.6	57.4	47.8	130
135									54.9	45.5	135
140									52.6	43.4	140
145									49.5	41.3	145
150									41.1	39.3	150
155										37.3	155
% I	0			46/ 0/ 0	92/46/ 0	92/46	92	92	92	100	I
% II	0			0/46/ 0	0/46/46	46/46	46	92	92	100	II
% III	0			0/ 0/46	0/ 0/46	0/46	46	46	92	100	III

** over rear, 396800 lbs counterweight / en arrière, contrepoids de 396800 lbs * over rear / en arrière

TAB 118501 / 118504

Remarks referring to load charts.

1. When calculating crane stresses and loads, German Industrial Standards (DIN) are applicable, in conformity with German legislation (published 2/85): The lifting capacities (stability margin) DIN/ISO are as laid down in DIN 15019, part 2, and ISO 4305. The crane's structural steel works is in accordance with DIN 15018, part 3. Design and construction of the crane comply with DIN 15018, part 2, and with F. E. M. regulations.
2. For the DIN/ISO load charts, depending on jib length, crane operation may be permissible at wind speeds up to 5 resp. 7 Beaufort.
3. Lifting capacities are given in metric tons.
4. The weight of the hook blocks and hooks must be deducted from the lifting capacities.
5. Working radii are measured from the slewing centreline.
6. Subject to modification of lifting capacities.
7. Lifting capacities above 604 kips only with special equipement.

Remarques relatives aux tableaux des charges.

1. La grue est calculée selon normes DIN conformément au décret fédéral 2/85. Les charges DIN/ISO respectent les sécurités au basculement requises par les normes DIN 15019, partie 2 et ISO 4305. La structure de la grue est conçue selon la norme DIN 15018, partie 3. La conception générale est réalisée selon la norme DIN 15018, partie 2, ainsi que selon les recommandations de la F. E. M.
2. Les charges DIN/ISO tiennent compte d'efforts au vent selon Beaufort de 5 à 7 en fonction de la longueur de flèche.
3. Les charges sont indiquées en tonnes.
4. Les poids du crochet ou de la moufle sont à déduire des charges indiquées.
5. Les portées sont prises à partir de l'axe de rotation de la partie tournante.
6. Charges données sous réserve de modification.
7. Forces de levage plus de 604 kips seulement avec équipement supplémentaire.

Les forces de levage sont données en kips (1,000 lbs).

Lifting capacities on 164 ft long telescopic boom.
Forces de levage à la flèche télescopique de 164 ft.

LM 1300

53 ft – 164 ft | 32'10" x 31'6" | 360° | 264550 lbs | 85%

ft	53 ft *		70 ft	87 ft	104 ft	121 ft	138 ft	155 ft	164 ft	ft
10	604	604								10
11	604	604								11
12	604	604	568							12
13	604	604	556							13
14	604	592	545	520						14
15	599	578	534	504						15
16	577	553	524	490						16
17	556	532	512	478	402					17
18	537	512	499	466	392					18
20	498	475	471	442	373	316				20
22	461	442	438	422	355	303				22
24	426	411	410	399	339	291	249			24
26	392	382	382	375	324	280	239			26
28	364	358	357	352	310	271	231	201		28
30	339	335	335	329	296	261	223	194	176	30
32	317	315	315	309	283	250	215	188	170	32
34	299	298	297	291	271	240	208	182	165	34
36	282	281	281	275	260	230	201	176	159	36
38	265	265	265	258	248	220	194	171	154	38
40	250	250	252	247	237	211	188	165	149	40
45	219	219	221	216	212	194	173	153	138	45
50			196	192	188	178	160	141	128	50
55			175	175	167	164	147	131	119	55
60			157	157	149	151	136	122	111	60
65			142	141	138	136	125	114	104	65
70				129	126	124	118	107	96	70
75				118	115	113	111	100	89	75
80					107	103	103	94	82.5	80
85					101	94	94.5	89	77.5	85
90					94.5	89	87	84.5	73	90
95					88	83	80.5	80	68.5	95
100						77	74	75	64.5	100
105						71.5	69.5	70.5	60.5	105
110						67	66.5	65.5	57.6	110
115							63	61.5	55	115
120							59.7	57.2	52.5	120
125							56.5	53.5	50.1	125
130							53.3	50.2	47.8	130
135								47.2	45.5	135
140								44.5	43.4	140
145								42	41.3	145
150								39.9	39.2	150
155									37.2	155
% I	0		46/ 0/ 0	92/46/ 0	92/46/ 0	92/46	92/46	92	100	I
% II	0		0/46/ 0	0/46/46	46/46/46	46/92	92/92	92	100	II
% III	0		0/ 0/46	0/ 0/46	0/46/92	46/46	46/92	92	100	III

* over rear / en arrière

TAB 118503 / 118505

53 ft – 164 ft | 32'10" x 31'6" | 360° | 231500 lbs | 85%

ft	53 ft	70 ft	87 ft	104 ft	121 ft	138 ft	155 ft	164 ft	ft
10	604								10
11	604								11
12	604	568							12
13	604	556							13
14	588	545	520						14
15	568	534	504						15
16	545	524	490						16
17	524	511	476	402					17
18	504	494	466	392					18
20	466	462	442	373	316				20
22	431	428	419	355	303				22
24	400	400	394	339	291	249			24
26	372	371	365	324	280	239			26
28	348	347	342	310	271	231	201		28
30	325	325	319	298	261	223	194	176	30
32	305	304	298	283	250	215	188	170	32
34	287	286	280	271	240	208	182	165	34
36	270	271	263	258	230	201	176	159	36
38	254	255	249	245	220	194	171	154	38
40	238	241	235	233	211	188	165	149	40
45	208	210	208	202	194	173	153	138	45
50		185	185	177	177	160	141	128	50
55		164	164	159	159	147	131	119	55
60		147	147	144	142	136	122	111	60
65		133	132	129	127	125	114	104	65
70			121	119	114	114	107	96	70
75			111	111	104	104	100	89	75
80				102	97	94.5	93.5	82.5	80
85				93	88.5	86	88	77.5	85
90				85.5	81	81	81	73	90
95				79	75.5	76	74	68.5	95
100					71.5	70.5	68	64.5	100
105					66.5	65	62.5	60.5	105
110					62	60.5	58	57.6	110
115						56.2	53.8	53.9	115
120						52.4	50	50.1	120
125						49	46.5	46.6	125
130						46.1	43.5	43.5	130
135							40.6	40.6	135
140							38	37.9	140
145							35.5	35.3	145
150							33.5	33.1	150
155								31	155
% I	0	46/ 0/ 0	92/46/ 0	92/46/ 0	92/46/ 0	92/46	92	100	I %
% II	0	0/46/ 0	0/46/46	46/46/46	46/92/92	92/92	92	100	II %
% III	0	0/ 0/46	0/ 0/46	0/46/92	46/46/92	46/92	92	100	III %

TAB 118506

Lifting capacities on 164 ft long telescopic boom.
Forces de levage à la flèche télescopique de 164 ft.

53 ft – 164 ft | 32'10" x 31'6" | 360° | 198420 lbs | 85%

ft	53 ft	70 ft	87 ft	104 ft	121 ft	138 ft	155 ft	164 ft	ft
10	604								10
11	604								11
12	604	568							12
13	604	556							13
14	583	545	520						14
15	560	534	504						15
16	537	524	490						16
17	516	509	478	402					17
18	495	489	466	392					18
20	455	455	441	373	316				20
22	420	420	411	355	303				22
24	389	388	383	339	291	249			24
26	361	361	355	324	280	239			26
28	336	336	330	310	271	231	201		28
30	312	312	306	296	261	223	194	176	30
32	292	293	286	283	250	215	188	170	32
34	274	276	270	268	240	208	182	165	34
36	257	260	254	252	230	201	176	159	36
38	241	243	238	235	220	194	171	154	38
40	226	228	228	220	211	188	165	149	40
45	195	197	197	189	190	173	153	138	45
50		173	173	169	168	160	141	128	50
55		153	152	150	147	145	131	119	55
60		135	137	134	130	129	122	111	60
65		120	122	122	117	116	114	104	65
70			109	110	105	103	104	96	70
75			98	98.5	94.5	93.5	94	89	75
80				89	88	87	85	82.5	80
85				81	80	79	76.5	76.5	85
90				74	73.5	72	69.5	70	90
95				68	67.5	66	63.5	64	95
100					62	60.5	58.2	58.4	100
105					57.1	55.7	53.4	53.5	105
110					53.1	51.5	49.2	49.3	110
115						47.8	45.5	45.6	115
120						44.4	42	42.1	120
125						41.4	38.8	38.9	125
130						38.8	35.9	35.9	130
135							33.2	33.2	135
140							30.8	30.8	140
145							28.7	28.5	145
150							26.9	26.5	150
155								24.7	155
% I	0	46/ 0/ 0	92/46/ 0/ 0	92/46/ 0	92/46/ 0	92/46	92	100	I
% II	0	0/46/ 0	0/46/46/ 0	46/46/46	46/92/92	92/92	92	100	II
% III	0	0/ 0/46	0/ 0/46/92	0/46/92	46/46/92	46/92	92	100	III

TAB 118507

Lifting heights.
Hauteurs de levage.

164 ft telescopic boom.
Flèche télescopique de 164 ft.

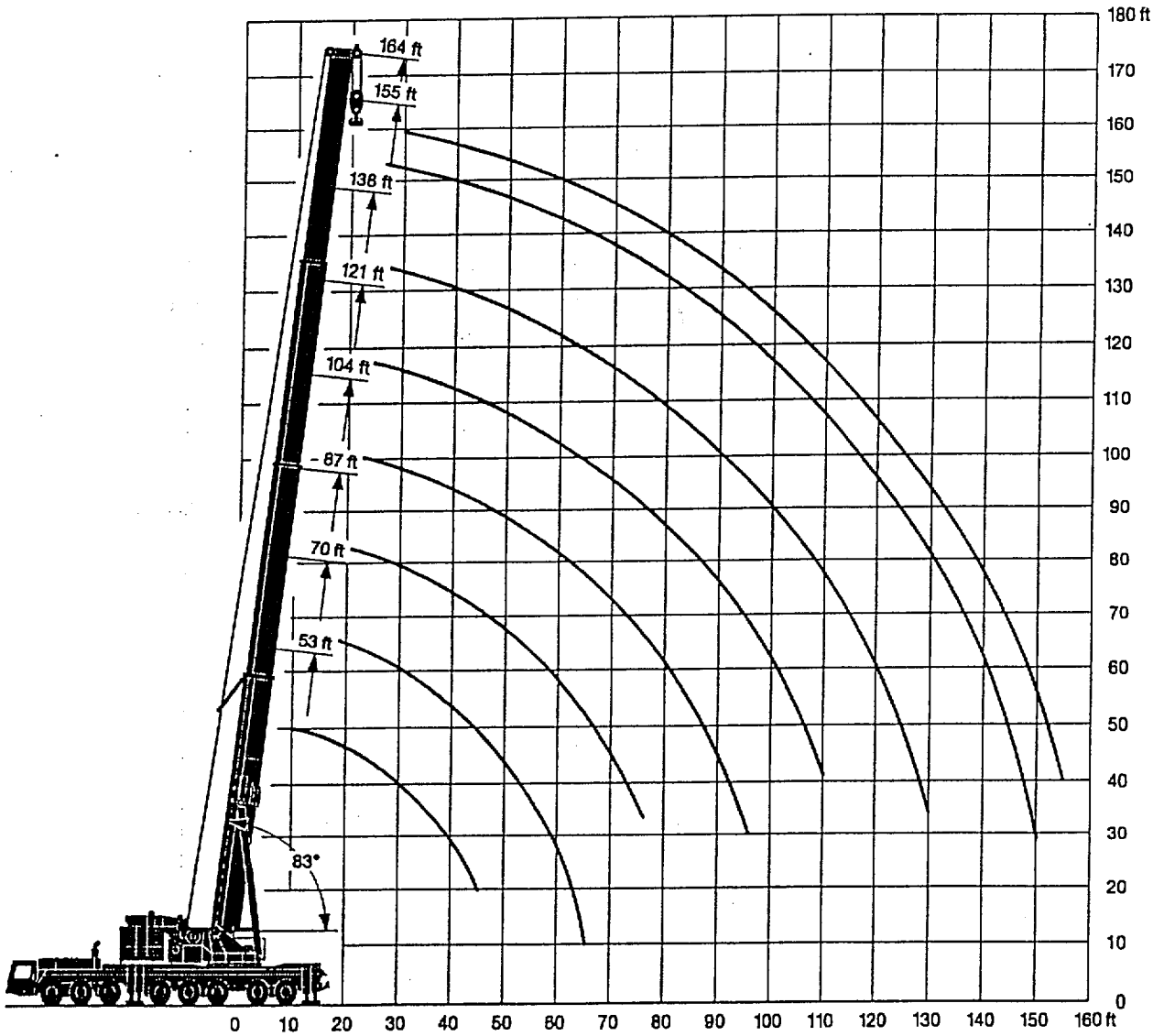

Lifting capacities on guyed telescopic boom.
Forces de levage à la flèche télescopique haubanée.

LTM 1500

104 ft – 155 ft | 32'10" x 31'6" | 360° | 396800 lbs [1] / 330700 lbs [2] | 85%

ft	104 ft [1]	104 ft [2]	121 ft [1]	121 ft [2]	138 ft [1]	138 ft [2]	155 ft [1]	155 ft [2]	ft
24		398		370		316		265	24
26		385		361		313		262	26
28		372		351		310		259	28
30		357		341		307		256	30
32		337		327		302		253	32
34	324	319	313	313		294		250	34
36	310	303	299	298		285		247	36
38	295	286	285	283		275		243	38
40	282	271	272	269	265	265	239	239	40
45	252	239	246	238	240	239	229	229	45
50	226	213	223	212	219	213	214	211	50
55	204	191	202	189	201	191	198	192	55
60	184	171	183	170	185	171	183	174	60
65	168	155	167	153	168	155	170	158	65
70	153	140	152	139	154	141	158	144	70
75	140	128	139	127	141	129	144	131	75
80	129	117	128	116	129	118	132	120	80
85	119	107	118	106	119	108	122	111	85
90	110	98.5	109	98	111	99.5	113	102	90
95	95.5	90	101	90	103	92	105	95	95
100			93.5	83	95.5	85	98	88	100
105			86.5	76.5	88.5	78.5	91.5	81.5	105
110			80	71	82.5	73	85.5	76	110
115					77	67.5	80	70.5	115
120					71.5	63	75	66	120
125					64.5	58.6	70.5	61.5	125
130					56.3	54.5	66	57.5	130
135							62	53.9	13[illegible]
140							58.1	50.4	14[illegible]
145							52.2	46.1	145
150							35.8	34.9	150
% I	46		92		92		92		I
% II	46		46		92		92		II
% III	46		46		46		92		III

TAB 118539 / 118540

Lifting heights.
Hauteurs de levage.

Guyed telescopic boom.
Flèche télescopique haubanée.

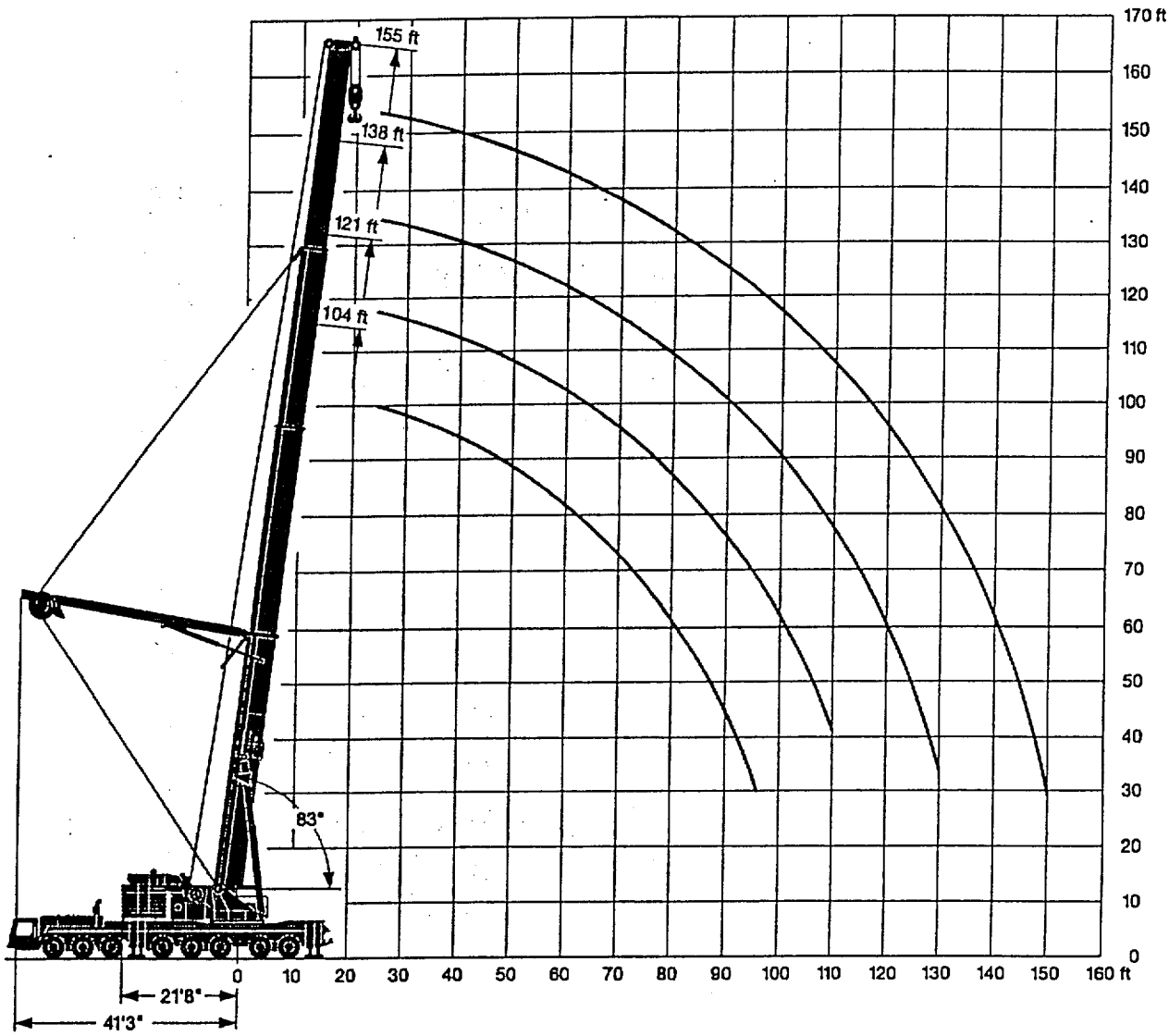

Lifting capacities on the lattice fly jib.
Forces de levage à la fléchette treillis fixe.

155 ft – 164 ft | 0° 46 ft – 207 ft | 32'10" x 31'6" | 360° | 330700 lbs | 85%

ft	155 ft + 7 ft*								164 ft + 7 ft*	ft
	46 ft	69 ft	92 ft	115 ft	138 ft	161 ft	184 ft	207 ft	207 ft	
40	110	93.5								40
45	103	89								45
50	97.5	84.5	66							50
55	91.5	80	63	50						55
60	86	75.5	60.5	48.1	39.8	31.9				60
65	81.5	71.5	57.9	46.2	38.3	30.7				65
70	77	68	55.7	44.4	36.8	29.4	23.6	20.1		70
75	73	64.5	53.6	42.7	35.4	28.2	22.7	19.4	18.8	75
80	69	61	51.6	41.1	34	27.1	21.8	18.6	18.1	80
85	65	58	49.8	39.6	32.8	26.1	20.9	17.8	17.3	85
90	61	55.1	48	38.2	31.6	25.1	20.1	17.1	16.6	90
95	57.6	52.5	46.4	36.9	30.5	24.2	19.3	16.4	15.9	95
100	54.8	50	44.9	35.6	29.5	23.3	18.5	15.7	15.3	100
105	52.2	47.5	43.2	34.4	28.5	22.4	17.8	15.1	14.7	105
110	49.7	45.2	41.4	33.2	27.5	21.6	17.1	14.5	14.2	110
115	47.3	43	39.5	32.1	26.5	20.9	16.5	13.9	13.6	115
120	45	40.9	37.6	31	25.5	20.1	15.7	13.4	13.1	120
125	42.8	38.9	35.7	29.9	24.6	19.3	14.8	12.7	12.5	125
130	40.7	36.9	33.9	28.9	23.7	18.5	14	12	11.8	130
135	38.7	35.1	32.2	27.9	22.9	17.8	13.4	11.3	11.2	135
140	36.7	33.2	30.5	26.9	22.1	17	12.9	10.6	10.5	140
145	34.8	31.5	28.9	26	21.3	16.3	12.4	10	9.9	145
150	33.6	30.4	27.4	25.1	20.5	15.6	11.9	9.6	9.5	150
155	32.4	29.2	26.2	24.1	19.8	15	11.5	9.2	9	155
160	31.2	28.2	25.3	22.9	19.1	14.4	11	8.8	8.5	160
165	30.1	27.1	24.3	21.7	18.4	13.7	10.6	8.5	7.9	165
170	29	26.1	23.4	20.9	17.8	13.1	10.2	8.1	7.4	170
175	27.9	25.1	22.5	20.2	17.1	12.5	9.8	7.8	7	175
180	26.9	24.2	21.6	19.4	16.5	12	9.4	7.5	6.5	180
185	25.9	23.3	20.8	18.7	15.9	11.5	9	7.2	6	185
190	24.9	22.4	19.9	18	15.6	11.2	8.6	6.9	5.6	190
195	23.9	21.5	19.1	17.3	15.2	10.9	8.3	6.6	5.2	195
200		20.6	18.4	16.6	14.7	10.7	7.9	6.3	4.7	200
205		19.8	17.6	16	14.1	10.4	7.6	6		205
210		19	16.9	15.3	13.6	10.2	7.2	5.8		210
215		18.2	16.1	14.7	13.1	10	6.9	5.5		215
220		17.4	15.4	14.1	12.6	9.7	6.6	5.2		220
225			14.7	13.5	12.1	9.5	6.3	5		225
230			14	12.9	11.6	9.3	6.1	4.7		230
235			13.4	12.3	11.1	9.1	5.9	4.5		235
240			12.7	11.8	10.7	8.7	5.7	4.3		240
245				11.2	10.2	8.3	5.6	4.1		245
250				10.7	9.8	7.9	5.4	3.9		250
255				10.2	9.3	7.6	5.2	3.7		255
260				9.7	8.9	7.2	5	3.6		260
265					8.5	6.8	4.7	3.4		265
270					8.1	6.5	4.4			270
275					7.6	6.1	4.1			275
280					7.2	5.8	3.8			280
285					6.9	5.4	3.5			285
290						5.1	3.3			290
295						4.8	3			295
300						4.4				300
305						4.1				305
% I	92								100	I
% II	92								100	II
% III	92								100	III

* adapter / pièce d'adaptateur

TAB 118557

155 ft – 164 ft | 20° 46 ft – 207 ft | 32'10" x 31'6" | 360° | 330700 lbs | 85%

ft	155 ft + 7 ft*								164 ft + 7 ft*	ft
	46 ft	69 ft	92 ft	115 ft	138 ft	161 ft	184 ft	207 ft	207 ft	
55	62									55
60	59.5	55								60
65	57.2	52.9								65
70	55.2	50.9								70
75	53.3	49	39.7							75
80	51.5	47.2	38.4							80
85	49.8	45.7	37.2							85
90	48.3	44.3	36.1	28						90
95	46.8	43	35	27.1						95
100	45.3	41.7	34.1	26.2	21.6					100
105	43.9	40.5	33.2	25.3	20.8	15.9				105
110	42.9	39.4	32.4	24.6	20.1	15.3				110
115	41.9	38.4	31.6	23.9	19.4	14.7				115
120	40.9	37.3	30.8	23.3	18.8	14.1	10.8			120
125	40	36.3	30.1	22.7	18.2	13.5	10.3			125
130	39.2	35.3	29.3	22.1	17.7	13	9.9			130
135	38.3	34.4	28.5	21.5	17.2	12.6	9.5	7.3	7.2	135
140	37.1	33.3	27.7	20.9	16.7	12.2	9.1	7	6.9	140
145	35.4	32	26.9	20.4	16.2	11.8	8.8	6.7	6.6	145
150	33.7	30.8	26.3	19.9	15.8	11.5	8.4	6.4	6.3	150
155	32.5	29.7	25.7	19.4	15.3	11.2	8.1	6.1	6	155
160	31.3	28.6	25.1	18.9	14.9	10.8	7.9	5.9	5.8	160
165	30.2	27.5	24.4	18.4	14.5	10.5	7.6	5.6	5.6	165
170	29.1	26.5	23.5	17.9	14.1	10.2	7.4	5.4	5.4	170
175	28	25.5	22.5	17.5	13.7	9.9	7.1	5.2	5.1	175
180	27	24.5	21.5	17.1	13.3	9.6	6.9	5	4.9	180
185		23.6	20.5	16.7	13	9.3	6.7	4.8	4.7	185
190		22.7	19.6	16.2	12.7	9.1	6.5	4.6	4.6	190
195		21.8	18.8	15.8	12.5	8.8	6.3	4.4	4.4	195
200		20.9	18.1	15.5	12.2	8.6	6.1	4.2	4.2	200
205		20	17.4	15	12	8.4	5.8			205
210			16.7	14.6	11.8	8.2	5.6			210
215			16.1	14	11.5	8	5.4			215
220			15.4	13.5	11.2	7.9	5.3			220
225			14.8	13	10.9	7.7	5.1			225
230				12.5	10.6	7.6	5			230
235				12	10.3	7.4	4.8			235
240				11.5	10.1	7.2	4.7			240
245				11	9.8	7	4.6			245
250				10.5	9.4	6.8	4.4			250
255				10.1	9	6.6	4.3			255
260					8.7	6.4	4.2			260
265					8.3	6.3	4			265
270					7.9	6.2	3.9			270
275					7.6	6	3.7			275
280						5.7	3.6			280
285						5.4	3.4			285
290						5.1	3.3			290
295						4.8	3.2			295
300						4.5	3.2			300
305							3			305
% I	92								100	I
% II	92								100	II
% III	92								100	III

* adapter / pièce d'adaptateur

TAB 116585

Lifting capacities on the lattice fly jib.
Forces de levage à la fléchette treillis fixe.

155 ft - 164 ft | 40° 46 ft - 184 ft | 32'10" x 31'6" | 360° | 330700 lbs | 85%

ft	155 ft + 7 ft*							164 ft + 7 ft*	ft
	46 ft	69 ft	92 ft	115 ft	138 ft	161 ft	184 ft	184 ft	
60	44.2								60
65	43.1								65
70	42.1								70
75	41.2								75
80	40.3	36.2							80
85	39.5	35.4							85
90	38.7	34.6							90
95	38.1	33.9							95
100	37.5	33.3	27.2						100
105	36.9	32.7	26.7						105
110	36.3	32.1	26.2						110
115	35.8	31.6	25.7	19.3					115
120	35.4	31.1	25.1	18.9					120
125	35	30.6	24.6	18.5					125
130	34.7	30.1	24.1	18.2					130
135	34.4	29.7	23.6	17.8	13.2				135
140	34.1	29.5	23.1	17.6	12.9				140
145	33.9	29.2	22.7	17.3	12.6				145
150	33.9	29	22.3	17	12.3				150
155		28.7	22	16.8	12.1	8.5			155
160		28.2	21.6	16.5	11.9	8.3			160
165		27.4	21.3	16.3	11.7	8.2			165
170		26.2	21	15.9	11.5	8			170
175		25.3	20.9	15.6	11.3	7.8	5.2	5.2	175
180			20.9	15.3	11.1	7.7	5.1	5	180
185			20.8	15	10.9	7.5	4.9	4.9	185
190			20.3	14.8	10.8	7.4	4.8	4.8	190
195			19.5	14.6	10.5	7.2	4.7	4.6	195
200				14.4	10.4	7.1	4.6	4.5	200
205				14.2	10.2	7	4.4	4.4	205
210				14	10.1	6.9	4.3	4.3	210
215				14	10	6.7	4.2	4.2	215
220				13.9	9.9	6.6	4.1	4.1	220
225					9.7	6.5	4	4	225
230					9.6	6.4	3.9	3.9	230
235					9.5	6.3	3.8	3.8	235
240					9.5	6.2	3.7	3.7	240
245						6.1	3.6	3.6	245
250						6	3.5		250
255						5.9	3.4		255
260						5.8	3.3		260
265						5.8	3.2		265
% I	92							100	I
% II	92							100	II
% III	92							100	III

* adapter / pièce d'adaptateur

TAB 118573

Lifting heights.
Hauteurs de levage.

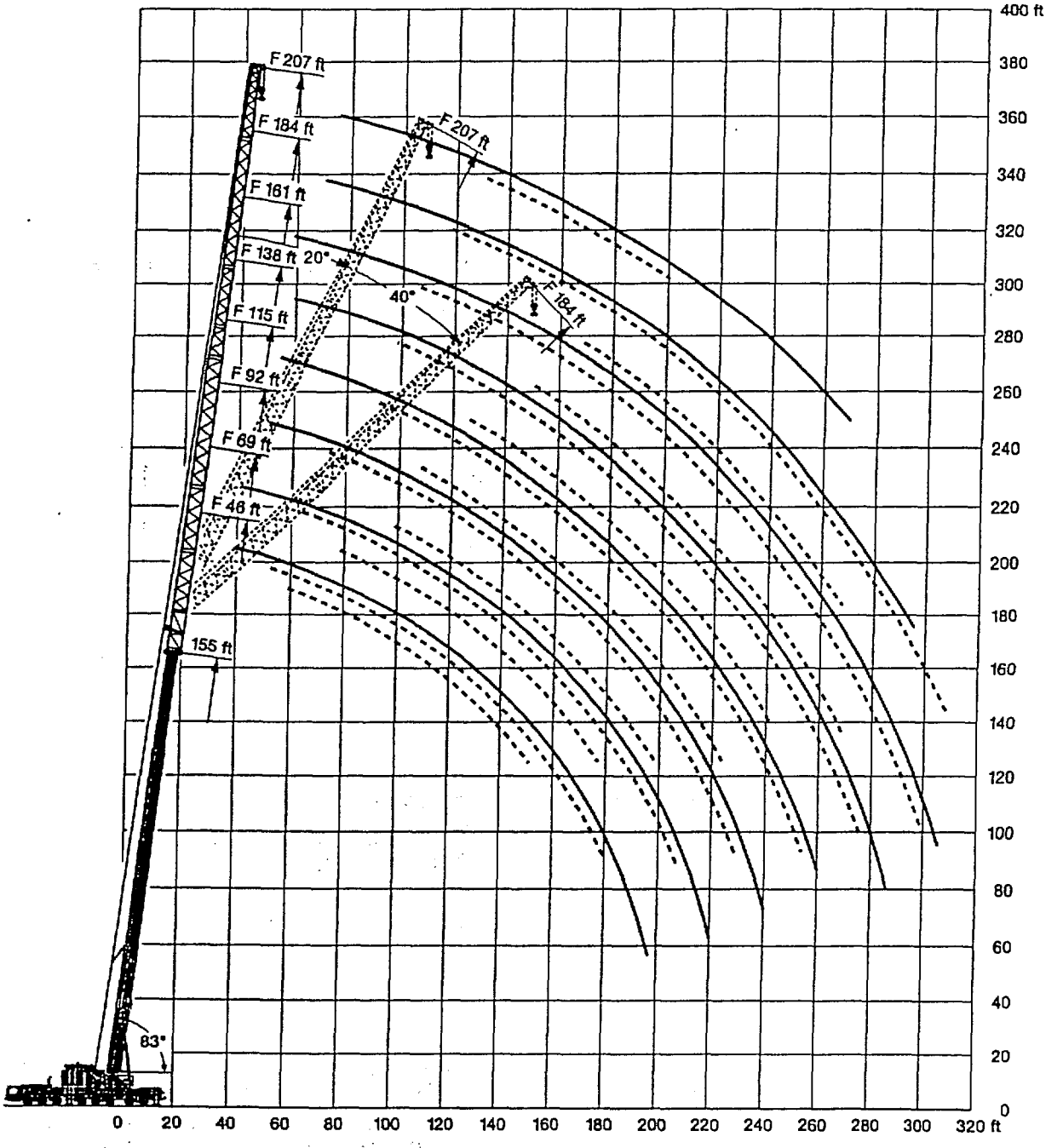

Lifting capacities on the lattice fly jib with guyed telescopic boom.

Forces de levage à la fléchette treillis fixe avec flèche télescopique haubanée.

155 ft | 0° 46 ft – 207 ft | 32'10" x 31'6" | 360° | 396800 lbs | 85%

ft	155 ft + 7 ft*								ft
	46 ft	69 ft	92 ft	115 ft	138 ft	161 ft	184 ft	207 ft	
34	138	114							34
36	135	111							36
38	132	109							38
40	130	107	82						40
45	124	102	78						45
50	116	97.5	74.5	58.9					50
55	109	93	71	56.4	45.2	36.8			55
60	103	89	68	54	43.3	35.3	28.5	22.9	60
65	97	85	65	51.8	41.6	34	27.5	22	65
70	92	82	62	49.6	39.9	32.7	26.4	21.1	70
75	87	78.5	59.5	47.5	38.3	31.5	25.5	20.3	75
80	82.5	75.5	57.1	45.6	36.8	30.3	24.5	19.6	80
85	78	72.5	54.8	43.8	35.3	29	23.4	18.9	85
90	74	69.5	52.6	42.1	34	27.9	22.5	18.2	90
95	70.5	66.5	50.7	40.5	32.7	26.8	21.5	17.4	95
100	67.5	64	49	38.9	31.6	25.7	20.7	16.7	100
105	64.5	61.5	47.4	37.4	30.4	24.7	19.8	15.9	105
110	62	59.2	45.8	36.2	29.4	23.8	19.1	15.3	110
115	59.3	56.9	44.3	35.1	28.3	22.9	18.3	14.7	115
120	56.8	54.6	42.7	34	27.3	22	17.6	14.1	120
125	54.4	52.3	41.1	32.9	26.4	21.2	16.9	13.5	125
130	52.1	50	39.7	31.8	25.5	20.3	16.3	12.9	130
135	49.8	47.9	38.2	30.7	24.4	19.6	15.6	12.4	135
140	47.7	45.8	36.8	29.6	23.3	18.8	14.8	11.9	140
145	45.7	43.8	35.5	28.6	22.3	18.1	14	11.4	145
150	44.4	42.4	34.2	27.6	21.5	17.5	13.2	10.9	150
155	43.1	41	33.2	26.6	20.8	16.8	12.4	10.4	155
160	41.9	39.7	32.3	25.7	20.1	16.2	11.8	9.9	160
165	40.6	38.4	31.4	24.8	19.5	15.6	11.3	9.4	165
170	39.4	37.1	30.6	23.9	18.8	15	10.9	8.8	170
175	37.9	35.8	29.8	23	18.2	14.4	10.5	8.2	175
180	35.5	34.6	29	22.2	17.6	13.9	10.1	7.6	180
185	32.4	33.4	28.2	21.4	17	13.3	9.7	7	185
190	28.9	32.6	27.5	20.9	16.4	12.8	9.3	6.7	190
195	25.5	31.4	26.7	20.4	15.8	12.2	8.9	6.4	195
200		29.9	26	19.9	15.2	11.7	8.5	6.1	200
210		24.8	24.8	19	14.1	10.6	7.8	5.5	210
215		21.5	24.4	18.5	13.5	10.1	7.5	5.2	215
220			23.9	18	13	9.6	7.1	4.9	220
230			20.4	17.2	12.2	8.9	6.5	4.4	230
240			14.7	16.3	11.7	8.5	5.8	3.9	240
250				15.3	11.2	8	5.2		250
260				11.4	10.7	7.6	4.7		260
270					10.2	7.2	4.4		270
280					9.3	6.8	4.1		280
290						6.4	3.8		290
300						6	3.5		300
305						5.3	3.4		305
310							3.2		310
320							3		320
% I	92								I
% II	92								II
% III	92								III

* adapter / pièce d'adaptateur

TAB 118593

155 ft | 20° 46 ft – 207 ft | 32'10" x 31'6" | 360° | 396800 lbs | 85%

ft	155 ft + 7 ft*								ft
	46 ft	69 ft	92 ft	115 ft	138 ft	161 ft	184 ft	207 ft	
55	66								55
60	63.5	59.3							60
65	61	56.9							65
70	58.8	54.6							70
75	56.5	52.5	42						75
80	54.5	50.6	40.6						80
85	52.7	48.8	39.3						85
90	50.9	47.3	38.1	29.7					90
95	49.3	45.8	37	28.7	22.9				95
100	47.7	44.3	36	27.8	22.1				100
105	46.1	43	35	26.8	21.3	16.9			105
110	45.2	41.7	34.1	26.1	20.6	16.3			110
115	44.3	40.5	33.2	25.3	19.9	15.7			115
120	43.4	39.3	32.4	24.6	19.2	15.1	11.4		120
125	42.5	38	31.5	23.9	18.6	14.5	10.9		125
130	41.7	36.9	30.8	23.3	18.1	13.9	10.4		130
135	40.9	36	30	22.7	17.5	13.4	9.9	7.5	135
140	40.2	35.1	29.3	22.1	17	12.9	9.5	7.1	140
145	39.4	34.3	28.6	21.5	16.5	12.5	9.1	6.8	145
150	38.7	33.5	27.9	20.9	15.9	12.1	8.6	6.4	150
155	38.1	32.8	27.4	20.3	15.4	11.7	8.3	6.1	155
160	37.4	32.1	26.8	19.7	15	11.3	8	5.8	160
165	36.7	31.4	26.3	19.2	14.5	11	7.7	5.6	165
170	36.1	30.7	25.8	18.6	14	10.6	7.4	5.3	170
175	35.5	30	25.3	18.3	13.6	10.3	7.2	5.1	175
180	34.9	29.4	24.9	18.1	13.2	9.9	6.9	4.8	180
185		28.8	24.4	17.8	12.8	9.6	6.6	4.6	185
190		28.6	24	17.5	12.4	9.3	6.4	4.4	190
195		28.3	23.5	17.3	12.1	9	6.2	4.2	195
200		28.1	23.2	17.1	11.9	8.7	5.9		200
205		27.9	23	16.8	11.8	8.4	5.7		205
210			22.8	16.6	11.6	8.1	5.4		210
215			22.6	16.4	11.4	7.9	5.2		215
220			22.4	16.2	11.2	7.8	5		220
225			22.2	16	11.1	7.6	4.8		225
230				15.8	10.9	7.5	4.7		230
235				15.6	10.8	7.4	4.6		235
240				15.4	10.6	7.2	4.4		240
245				15.1	10.5	7.1	4.3		245
250				14.9	10.3	7	4.2		250
255				14.8	10.2	6.9	4.1		255
260					10	6.8	4		260
265					9.9	6.6	3.9		265
270					9.7	6.5	3.8		270
275					9.6	6.4	3.7		275
280						6.3	3.6		280
285						6.2	3.5		285
290						6.1	3.4		290
295						6	3.3		295
300						5.9	3.2		300
305							3		305
310							3		310
315							2.9		315
320							2.8		320
% I	92								I
% II	92								II
% III	92								III

* adapter / pièce d'adaptateur

TAB 118601

Lifting capacities on the lattice fly jib with guyed telescopic boom.

Forces de levage à la fléchette treillis fixe avec flèche télescopique haubanée.

155 ft | 40° 46 ft – 184 ft | 32'10" x 31'6" | 360° | 396800 lbs | 85%

ft	155 ft + 7 ft*							ft
	46 ft	69 ft	92 ft	115 ft	138 ft	161 ft	184 ft	
70	41.9							70
75	41.2							75
80	40.5	37.1						80
85	39.8	36.3						85
90	39.2	35.4						90
95	38.6	34.6						95
100	38.1	33.9	27.9					100
105	37.6	33.3	27.3					105
110	37	32.7	26.8					110
115	36.5	32.1	26.3	19.7				115
120	36	31.5	25.9	19.2				120
125	35.5	30.9	25.5	18.8				125
130	35	30.4	25.1	18.4				130
135	34.6	29.9	24.7	18	13.3			135
140	34.1	29.4	24.3	17.7	12.9			140
145	33.8	29	24	17.4	12.6			145
150	33.8	28.7	23.6	17.1	12.3			150
155		28.5	23.3	16.8	12	8.2		155
160		28.2	23	16.6	11.8	8		160
165		28	22.7	16.3	11.5	7.8	5.1	165
170		27.8	22.6	16	11.3	7.6	4.9	170
175		27.6	22.5	15.8	11.1	7.5	4.7	175
180			22.4	15.5	10.9	7.3	4.6	180
185			22.3	15.3	10.7	7.2	4.4	185
190			22.2	15.1	10.5	7	4.2	190
195			22.1	14.8	10.3	6.9	4.1	195
200				14.7	10.2	6.7	4	200
205				14.6	10.2	6.6	3.9	205
210				14.6	10.2	6.4		210
215				14.5	10.2	6.3		215
220				14.5	10.2	6.2		220
225					10.1	6.1		225
230					10.1	6.1		230
235					10.1	6.1		235
240					10.1	6.1		240
245						6.1		245
250						6.1		250
255						6.1		255
260						6.1		260
265						6.1		265
% I	92							I
% II	92							II
% III	92							III

* adapter / pièce d'adaptateur

TAB 118609

Lifting heights.
Hauteurs de levage.

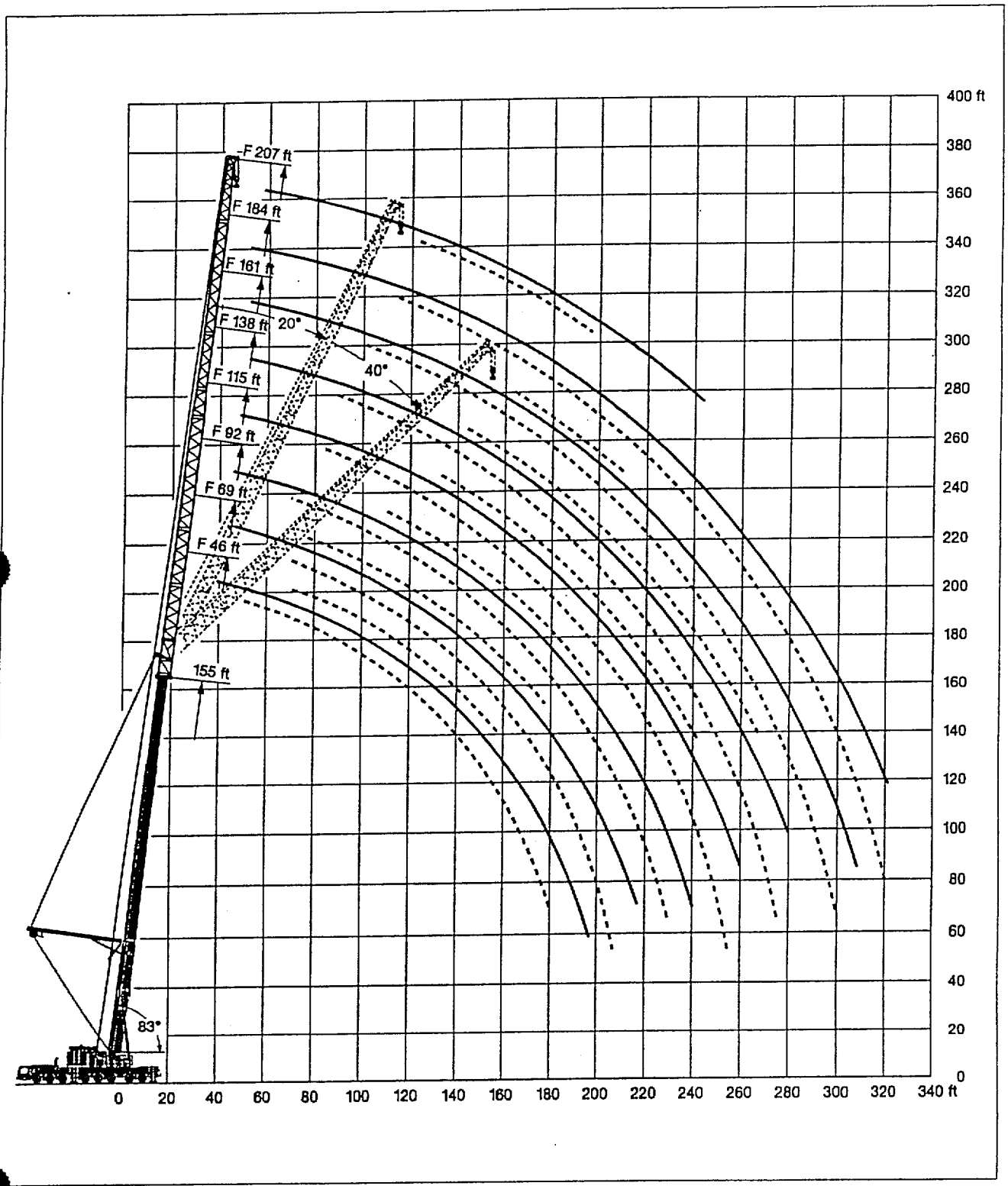

Lifting capacities on the lifting lattice jib.
Forces de levage à la fléchette treillis relevable.

83°
53 ft – 155 ft

69 ft – 299 ft

32'10" x 31'6"

360°

330700 lbs

85%

ft	53 ft + 13 ft*											87 ft + 13 ft*											ft
	69ft	92ft	115ft	138ft	161ft	184ft	207ft	230ft	253ft	276ft	299ft	69ft	92ft	115ft	138ft	161ft	184ft	207ft	230ft	253ft	276ft	299ft	
40	249																						40
45	223																						45
50	202	200										177											50
55	183	183	178									165	158										55
60	168	166	165	145								155	148	137									60
65	155	153	152	141								148	139	132									65
70	144	142	141	136	110							139	131	125	112								70
75	134	132	131	130	108	85.5						130	125	119	108	92							75
80		124	122	121	106	84	65.5						119	113	105	90	73						80
85		116	114	113	103	82.5	64.5						112	108	101	88	71.5						85
90		109	108	107	102	81	63.5	48.6					106	103	97	86	70.5	57					90
95		103	102	101	98	79.5	62.5	47.8	38				100	98.5	93.5	83.5	69.5	56.1	44.5				95
100			96	95	93.5	78	61.5	47.1	37.2	29			94.5	93	90	81	68	55.4	43.8	34.5			100
105			91	90	88.5	77	60.5	46.3	36.5	28.4	20.7			88	86.5	78.5	67	54.6	43.1	33.9	25.9		105
110			86.5	85.5	84	76	59.8	45.6	35.8	27.9	20.2			83.5	82.5	76.5	65.5	53.9	42.5	33.4	25.4		110
115			82.5	81.5	80	75	59	45	35.2	27.3	19.7			79.5	78.5	74.5	64	53	41.9	32.9	25	18.8	115
120			75.5	77.5	76	73.5	58.1	44.3	34.6	26.9	19.3			76	74.5	72.5	63	52.1	41.4	32.4	24.6	18.4	120
125				74	72.5	71	57.3	43.6	33.9	26.4	18.8				71	69.5	61.5	51.2	40.8	31.9	24.2	17.9	125
130				70.5	69	67.5	56.6	42.8	33.3	25.9	18.4				68	66.5	60.5	50.4	40.3	31.4	23.8	17.6	130
135				67.5	66	64.5	55.9	42.1	32.7	25.5	18				65	63.5	59.1	49.6	39.7	30.9	23.5	17.2	135
140				63.5	63	61.5	55.1	41.4	32.1	25	17.6				62	60.5	57.9	48.8	39.2	30.4	23.1	16.8	140
145					60.5	59.1	54.3	40.7	31.5	24.6	17.2				59.5	58	56.6	48.1	38.6	29.9	22.7	16.5	145
150					58.1	56.6	53.4	40	31	24.2	16.8				57.1	55.6	54.4	47.4	38	29.5	22.3	16.1	150
155					56	54.5	52.5	39.4	30.4	23.7	16.5					53.6	52.2	46.7	37.4	29	21.9	15.8	155
160					52.3	52.4	51.2	38.7	29.8	23.3	16.1					51.6	50.1	46.1	36.8	28.5	21.5	15.5	160
165					46.6	50.3	49.5	38.2	29.2	22.9	15.8					49.6	48.1	45.4	36.3	28.1	21.1	15.2	165
170					39.9	48.4	47.5	37.6	28.7	22.5	15.5					47.7	46.2	44.7	35.9	27.6	20.7	14.8	170
175						46.6	45.7	37.1	28.2	22	15.2						44.4	43.1	35.4	27.1	20.3	14.6	175
180						44.8	44	36.5	27.6	21.6	14.8						42.8	41.5	35	26.7	20	14.3	180
185						42.2	42.4	36	27.1	21.2	14.5						41.2	39.9	34.6	26.3	19.6	14	185
190						37.4	40.8	35.5	26.7	20.8	14.2						39.7	38.4	34.2	25.9	19.3	13.9	190
195							39.3	35	26.2	20.5	14						38.3	37	33.8	25.6	19	13.7	195
200							37.6	34.6	25.7	20.1	13.7							35.7	33.4	25.2	18.7	13.4	200
205							34.8	34.1	25.3	19.8	13.4							34.4	32.8	24.9	18.4	13.2	205
210							30.3	33.6	24.9	19.5	13.1							33.2	31.6	24.5	18.1	13	210
215							25.9	32.6	24.4	19.2	12.9							32.1	30.4	24.2	17.9	12.7	215
220								31.4	24	18.9	12.6								29.3	23.9	17.6	12.5	220
225								30.1	23.6	18.6	12.4								28.4	23.6	17.3	12.3	225
230								28.2	23.2	18.3	12.2								27.6	23.3	17.1	12.1	230
235								25	22.9	18	11.9								26.6	23	16.8	11.9	235
240									22.6	17.8	11.7								25.7	22.7	16.6	11.7	240
245									22.5	17.5	11.5									22.5	16.4	11.5	245
250									22.2	17.2	11.2									22.1	16.2	11.3	250
255									19.8	17	11									21.4	15.9	11.1	255
260									16.5	16.7	10.8									20.6	15.7	10.9	260
265										16.5	10.6										15.5	10.8	265
270										16.5	10.4										15.3	10.6	270
275										16.5	10.2										15	10.4	275
280										14.6	10										15	10.2	280
285											9.8										14.9	10	285
290											9.6											9.8	290
295											9.4											9.7	295
300											9.4											9.5	300
305											8.7											9.3	305
% I	0											46											I
% II	0											46											II
% III	0											0											III

* adapter / pièce d'adaptateur

TAB 116629.1/2/3/4

The LTM 1500 can be equipped to tackle any job.

83°
53 ft – 155 ft

69 ft – 299 ft

32'10" x 31'6"

360°

330700 lbs

85%

ft	121 ft + 13 ft*											155 ft + 13 ft*											ft
	69ft	92ft	115ft	138ft	161ft	184ft	207ft	230ft	253ft	276ft	299ft	69ft	92ft	115ft	138ft	161ft	184ft	207ft	230ft	253ft	276ft	299ft	
55	145																						55
60	136	126										101											60
65	128	120										95.5											65
70	122	114	104									91	84										70
75	116	108	101	87.5								87	80.5	73.5									75
80	111	103	97	85.5	73.5							83.5	77	71	62.5								80
85	106	99	93.5	83.5	72							80	73.5	68.5	61								85
90		95	90	81	70.5	58.4						76.5	70.5	66	59.4	51.2							90
95		91.5	87	79	69	57.4	46.4						67.5	63.5	57.6	50.3	42.2						95
100		88	84.5	76.5	67.5	56.3	46	35.6					65	61.5	55.8	49.2	41.4	34.3					100
105			82	74.5	65.5	55.2	45.6	35.4	27.4				62.5	59.7	54.1	47.9	40.7	33.7	27.3				105
110			79.5	72.5	64.5	54.2	45.1	35.1	27.2				60	58	52.5	46.6	39.9	33.1	26.8				110
115			76.5	70.5	63	53.2	44.4	34.9	27.1	20.6				56.4	51	45.4	39.1	32.6	26.4	21			115
120			73	68.5	61.5	52.2	43.7	34.6	26.9	20.4	14.9			54.9	49.5	44.2	38.2	32.1	26	20.7	15.5		120
125			69.5	67	60	51.3	43	34.3	26.8	20.1	14.7			53.5	48.1	43.1	37.3	31.5	25.7	20.3	15.4	10.7	125
130			66.5	65	58.6	50.5	42.3	34	26.6	20	14.5			52.1	46.8	42.1	36.5	30.9	25.3	20	15.2	10.7	130
135				62	57.3	49.6	41.7	33.5	26.4	19.8	14.3			50.8	45.5	41.2	35.6	30.2	24.9	19.7	15	10.7	135
140				59.6	56	48.7	41.1	33.1	26.1	19.6	14.1				44.3	40.4	34.9	29.5	24.4	19.3	14.8	10.6	140
145				57.1	54.7	47.7	40.5	32.7	25.8	19.4	14				43.1	39.6	34.1	28.9	23.9	19	14.5	10.6	145
150				55	53.4	46.7	39.8	32.3	25.5	19.2	13.8				42	38.9	33.3	28.3	23.5	18.7	14.3	10.4	150
155					51.4	45.7	39.2	31.9	25.1	19.1	13.6				40.9	38.2	32.6	27.7	23	18.3	14	10.2	155
160					49.3	44.8	38.5	31.5	24.8	18.9	13.5					37.5	31.9	27.1	22.6	18	13.7	10	160
165					47.4	43.8	37.9	31.2	24.4	18.7	13.3					36.8	31.2	26.7	22.1	17.7	13.4	9.8	165
170					45.6	42.9	37.3	30.9	24.1	18.6	13.2					36.2	30.5	26.2	21.7	17.4	13.1	9.6	170
175					43.9	41.7	36.8	30.6	23.8	18.4	13					35.6	29.9	25.8	21.3	17.1	12.8	9.4	175
180						40.3	36.2	30.3	23.5	18.1	12.9					35	29.2	25.4	20.9	16.8	12.5	9.3	180
185						38.8	35.7	30.1	23.3	17.9	12.8						28.6	25	20.5	16.5	12.3	9.1	185
190						37.3	35.1	29.8	23.1	17.6	12.6						28	24.7	20.1	16.2	12	8.9	190
195						36	34.6	29.6	22.8	17.4	12.4						27.5	24.3	19.8	16	11.7	8.8	195
200							33.7	29.3	22.6	17.2	12.2						26.9	24	19.4	15.8	11.5	8.7	200
205							32.5	29.1	22.3	17	11.9							23.7	19.1	15.6	11.3	8.6	205
210							31.4	28.9	22.1	16.8	11.7							23.3	18.7	15.4	11.1	8.5	210
215							30.3	28.1	21.8	16.6	11.5							23	18.4	15.2	10.9	8.4	215
220							29.2	27.3	21.6	16.5	11.4							22.7	18.1	15	10.8	8.3	220
225								26.5	21.4	16.3	11.2							22.4	17.8	14.8	10.6	8.2	225
230								25.4	21.2	16.1	11.1								17.5	14.6	10.5	8.1	230
235								24.5	20.9	16	11								17.2	14.5	10.3	8.1	235
240								23.7	20.7	15.8	10.8								16.9	14.3	10.2	8	240
245									20.5	15.6	10.7								16.6	14.2	10	7.9	245
250									20.3	15.5	10.5									14	9.9	7.8	250
255									19.7	15.3	10.4									13.8	9.8	7.7	255
260									19	15.2	10.3									13.7	9.6	7.6	260
265									18.3	15	10.2									13.5	9.5	7.6	265
270										14.9	10									13.4	9.4	7.5	270
275										14.6	9.9									13.2	9.2	7.4	275
280										14	9.8										9.1	7.3	280
285										13.3	9.7										9	7.3	285
290											9.6										8.9	7.2	290
295											9.4										8.7	7.1	295
300											9.3											7.1	300
305											9.2											7	305
310											9.1											6.9	310
315																						6.8	315
320																						6.8	320
% I	92											92											I
% II	46											92											II
% III	46											92											III

* adapter / pièce d'adaptateur

TAB 118629.5/6/7/8

Lifting heights.
Hauteurs de levage.

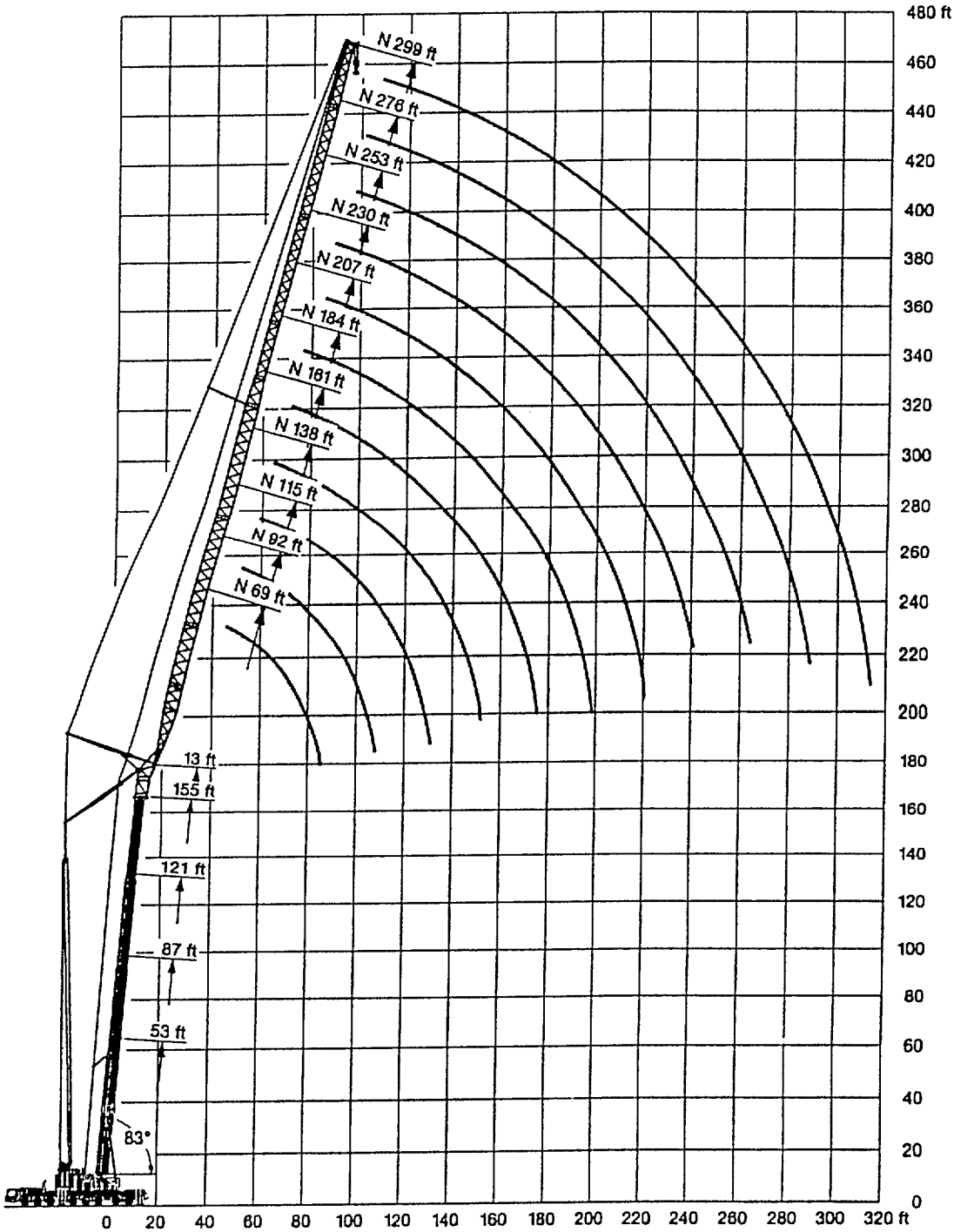

Telescopic boom / Flèche télescopique: 83°.

Lifting capacities on the luffing lattice jib.
Forces de levage à la fléchette treillis relevable.

LTM 1500

75°
53 ft – 155 ft

69 ft – 299 ft

32'10" x 31'6"

360°

330700 lbs

↔ ft	53 ft + 13 ft*											87 ft + 13 ft*											↔ ft
	69ft	92ft	115ft	138ft	161ft	184ft	207ft	230ft	253ft	276ft	299ft	69ft	92ft	115ft	138ft	161ft	184ft	207ft	230ft	253ft	276ft	299ft	
55	195																						55
60	178																						60
65	164																						65
70	153	151										131											70
75	142	141										124											75
80	133	132	130									117	114										80
85	125	123	122									113	108										85
90		116	114	113								108	102	100									90
95		110	108	107									98	95									95
100		104	102	101	97								94.5	90.5	87.5								100
105		98.5	97	95.5	94	77							92	86.5	83.5	77							105
110		93.5	92	91	89.5	75.5							88	83	80	74.5							110
115			87.5	86.5	85	74							84	80.5	77	72.5							115
120			83.5	82.5	81	73	58.6							78	74	70	62						120
125			80	79	77.5	71.5	57.8	44.3						74.5	71	67.5	60.5	50.7					125
130			76.5	75.5	74	71	56.9	43.6						71.5	69	65.5	58.9	49.8					130
135				72	70.5	68.5	56.1	43						68	66.5	63	57.5	48.9					135
140				69	67.5	66	55.3	42.3	32.9						64	61	56	48.1	39				140
145				66	64.5	63	54.6	41.5	32.3	24.3					61	59.1	54.4	47.2	38.4	30.7			145
150				63.5	62	60.5	54	40.9	31.8	23.9					58.7	57.2	52.9	46.3	37.8	30.3			150
155				61	59.7	58.1	53.4	40.2	31.2	23.4					56.4	55	51.5	45.3	37.2	29.8			155
160					57.4	55.8	52.6	39.5	30.7	23	16.5				54.2	53.8	50.2	44.4	36.6	29.3	22.2		160
165					55.2	53.7	51.8	38.8	30.2	22.5	16.2					50.7	48.9	43.5	36.1	28.8	21.8	15.8	165
170					53.1	51.7	50.7	38.2	29.6	22.1	15.8					48.8	47.3	42.6	35.4	28.3	21.5	15.5	170
175					51.2	49.8	49	37.5	29	21.7	15.5					47	45.5	41.8	34.8	27.9	21.1	15.1	175
180						48	47.1	36.9	28.4	21.3	15.2					45.3	43.8	41.1	34.3	27.5	20.8	14.8	180
185						46.2	45.4	36.4	27.9	20.8	14.8						42.2	40.5	33.7	27.1	20.4	14.5	185
190						44.6	43.8	35.9	27.3	20.4	14.5						40.7	39.4	33.2	26.6	20	14.3	190
195						43.1	42.3	35.4	26.8	20	14.3						39.2	38	32.6	26.1	19.7	14	195
200						40.6	40.8	35	26.3	19.6	14						37.9	36.6	32.4	25.6	19.3	13.7	200
205							39.4	34.6	25.9	19.2	13.7						36.6	35.3	32.3	25.2	18.9	13.5	205
210							38.1	34.2	25.6	18.9	13.3							34.1	32.2	24.7	18.6	13.2	210
215							36.9	33.8	25.3	18.6	13							32.9	31.3	24.4	18.3	12.9	215
220							34.4	33.4	25	18.3	12.7							31.8	30.3	24.1	17.9	12.6	220
225								32.8	24.7	18.1	12.4							30.8	29.2	23.8	17.6	12.3	225
230								31.8	24.5	17.9	12.1								28.2	23.6	17.3	12	230
235								30.7	24.2	17.7	11.8								27.3	23.3	17.2	11.7	235
240								29.7	23.9	17.5	11.7								26.3	23.1	17.1	11.4	240
245								28.7	23.7	17.3	11.5								25.5	22.8	16.9	11.2	245
250									23.4	17.1	11.3								24.6	22.5	16.8	11	250
255									23.2	16.9	11.2								23.8	22	16.7	10.9	255
260									22.9	16.7	11									21.3	16.6	10.7	260
265									22.1	16.5	10.9									20.5	16.5	10.6	265
270										16.4	10.8									19.8	16.3	10.5	270
275										16.2	10.6									19	16.2	10.3	275
280										16	10.4										16.1	10.2	280
285										15.8	10.3										15.8	10.1	285
290										15.7	10.1										15.3	9.9	290
295										15.5	10										14.7	9.8	295
300											9.8										14.1	9.6	300
305											9.7											9.5	305
310											9.5											9.4	310
315																						9.2	315
320																						9.1	320
% I	0											46											I %
% II	0											46											II %
% III	0											0											III %

* adapter / pièce d'adaptateur

TAB 118636.1/2

75°
53 ft – 155 ft

69 ft – 299 ft

32'10" x 31'6"

360°

330700 lbs

ft	121 ft + 13 ft*											155 ft + 13 ft*											ft
	69ft	92ft	115ft	138ft	161ft	184ft	207ft	230ft	253ft	276ft	299ft	69ft	92ft	115ft	138ft	161ft	184ft	207ft	230ft	253ft	276ft	299ft	
80	104																						80
85	98																						85
90	93.5	90																					90
95	90	85.5										64											95
100	87	81.5	79									61	58.1										100
105		78	75.5									58.6	55.2										105
110		75.5	72.5									56.4	53.7										110
115		73	69.5	66.5									50.4	48.6									115
120		71	66.5	64	59								48.4	46.5	44								120
125			64	61.5	57.2								46.9	44.6	42.2								125
130			62.5	59.3	55.5								45.7	42.8	40.5								130
135			61.5	57.2	53.3	47.9							44.6	41.2	38.9	36.4							135
140			59.9	55.4	52.1	46.8	40							39.9	37.4	34.9							140
145			57.8	54.1	50.4	45.7	39.2							38.8	36	33.5	30.4						145
150			55.5	53	48.8	44.5	38.4							37.8	34.7	32.3	29.3						150
155				51.5	47.2	43.3	37.6	31.2						36.8	33.6	31.1	28.2	24.8					155
160				49.8	46	42.2	36.9	30.7	24.7						32.8	29.9	27.1	24					160
165				47.9	45.2	41	36.1	30.2	24.3						32.2	28.8	26.1	23.2	20				165
170				46.1	44.5	39.9	35.3	29.7	23.9						31.6	27.8	25.1	22.4	19.4				170
175					42.9	39.1	34.5	29.2	23.6	18.1					31.1	27.1	24.2	21.6	18.9	15.2			175
180					41.3	38.3	33.7	28.7	23.2	17.8	13.1				30.5	26.5	23.3	20.8	18.2	14.7			180
185					39.8	37.5	33	28.1	22.8	17.5	12.9					25.9	22.4	20	17.5	14.2	10.8		185
190					38.4	36.4	32.2	27.6	22.5	17.2	12.7					25.2	21.7	19.2	16.8	13.7	10.5		190
195					37.1	35.1	31.7	27	22.1	16.9	12.4					24.7	21.2	18.4	16.1	13.2	10.2	7.7	195
200						33.8	31.3	26.5	21.7	16.6	12.2					24.1	20.8	17.7	15.5	12.7	9.9	7.5	200
205						32.6	30.9	26.1	21.3	16.3	12						20.5	17	14.8	12.3	9.6	7.2	205
210						31.5	30.5	25.7	20.9	16	11.7						20.1	16.6	14.2	11.8	9.2	7	210
215						30.4	29.4	25.4	20.6	15.7	11.5						19.8	16.2	13.8	11.3	9	6.7	215
220							28.3	25.1	20.3	15.5	11.3						19.5	15.8	13.3	10.9	8.6	6.5	220
225							27.4	24.8	20	15.2	11.1						19.1	15.4	12.9	10.4	8.3	6.3	225
230							26.4	24.4	19.7	14.9	10.9							15	12.5	10	8	6	230
235							25.6	23.5	19.7	14.7	10.7							14.6	12.1	9.6	7.6	5.8	235
240							24.7	22.6	19.6	14.4	10.6							14.2	11.8	9.3	7.3	5.5	240
245								21.8	19.5	14.3	10.4							13.8	11.4	9	7	5.3	245
250								21	19.4	14.2	10.2								11	8.8	6.6	5	250
255								20.3	18.8	14.1	10								10.5	8.5	6.2	4.8	255
260								19.6	18.1	14.1	9.9								10.1	8.3	5.9	4.5	260
265									17.4	14	9.9								9.7	8	5.7	4.1	265
270									16.7	13.9	9.8								9.3	7.8	5.6	3.8	270
275									16	13.7	9.7								9	7.6	5.5	3.5	275
280									15.4	13	9.6									7.4	5.3	3.4	280
285									14.8	12.3	9.5									7.2	5.2	3.2	285
290										11.6	9.4									6.9	5	3	290
295										11.1	9.3									6.8	4.9	2.9	295
300										10.7	9.2										4.8	2.7	300
305										10.4	8.9										4.6	2.6	305
310											8.6										4.5	2.4	310
315											8.2										4.4		315
320											7.9										4.3		320
325											7.5												325
% I	92											92											I
% II	46											92											II
% III	46											92											III

* adapter / pièce d'adaptateur

TAB 118636.3/4

La LTM 1500 possède l'équipement qui convient à chaque problème.

Lifting heights.
Hauteurs de levage.

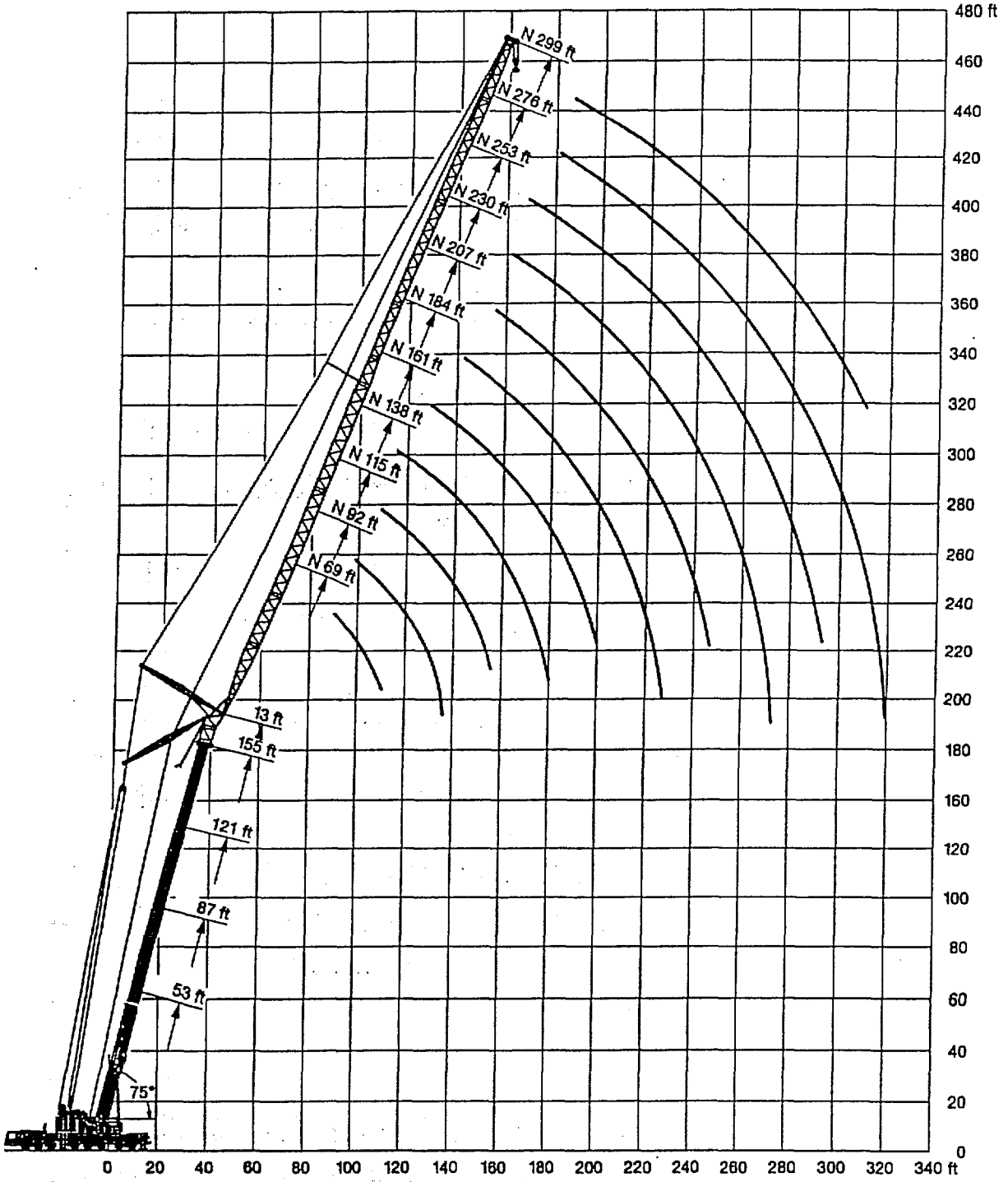

Telescopic boom / Flèche télescopique: 75°.

Lifting capacities on the lifting lattice jib with guyed telescopic boom.

Forces de levage à la fléchette treillis relevable avec flèche télescopique haubanée.

67°
121 ft – 155 ft

69 ft – 299 ft

32'10" x 31'6"

360°

330700 lbs

85%

ft	121 ft + 13 ft*											155 ft + 13 ft*											ft
	69ft	92ft	115ft	138ft	161ft	184ft	207ft	230ft	253ft	276ft	299ft	69ft	92ft	115ft	138ft	161ft	184ft	207ft	230ft	253ft	276ft	299ft	
100	87																						100
105	82.5																						105
110	78																						110
115	74.5	72.5																					115
120		69										64.5											120
125		65.5	63.5									61.5											125
130		62.5	60.5									58.8											130
135		59.8	57.9										54.2										135
140		57.2	55.3	53.8									51.8										140
145			52.9	51.4									49.6	47.7									145
150			50.7	49.2									47.5	45.7									150
155			48.6	47.2	45.6								45.6	43.8									155
160			46.7	45.2	43.7									42	40								160
165				43.4	41.9	39.7								40.3	38.4								165
170				41.7	40.2	38								38.7	36.8								170
175				40.1	38.6	36.5								37.3	35.2	33.7							175
180				38.7	37.1	35	33.8								33.9	32.4							180
185				37.3	35.6	33.5	32.4								32.6	31	28.8						185
190				35.9	34.3	32.2	31.1								31.4	29.8	27.5						190
195					33	31	29.9	27.8							30.3	28.6	26.4						195
200					31.9	29.8	28.7	26.6							29.2	27.5	25.2	23.3					200
205					30.7	28.7	27.5	25.4	22.8							26.5	24.2	22.3					205
210						27.6	26.4	24.3	22.6							25.5	23.2	21.3	19.6				210
215						26.6	25.4	23.3	21.9							24.5	22.2	20.3	18.6				215
220						25.6	24.4	22.3	21	16.7						23.6	21.3	19.4	17.6				220
225						24.7	23.5	21.3	20	16.5							20.4	18.5	16.7	14.2			225
230						23.8	22.6	20.4	19.1	16.3	11.7						19.6	17.6	15.8	13.1			230
235						23	21.7	19.6	18.1	15.8	11.6						18.8	16.8	14.9	12.1			235
240							20.9	18.7	17.3	14.9	11.4						18.1	16	14	11.4	9.5		240
245							20.2	17.9	16.4	14	11.3						17.4	15.3	13.2	10.8	9		245
250							19.4	17.1	15.6	13.1	11							14.6	12.3	10.3	8.6	7.2	250
255							18.7	16.4	14.8	12.2	10.5							13.9	11.5	9.9	8.2	6.8	255
260								15.7	14	11.5	10.1							13.2	11.1	9.5	7.8	6.4	260
265								15	13.3	10.9	9.6							12.6	10.7	9.1	7.4	6	265
270								14.3	12.6	10.5	9.2								10.3	8.7	7	5.6	270
275								13.7	11.9	10.1	8.8								9.9	8.4	6.6	5.3	275
280								13.2	11.3	9.7	8.4								9.6	8	6.3	4.9	280
285									10.9	9.3	8								9.3	7.7	6	4.6	285
290									10.5	8.9	7.6								9	7.4	5.7	4.3	290
295									10.2	8.6	7.3								8.7	7.1	5.4	4	295
300									9.9	8.2	6.9									6.8	5.1	3.7	300
305										7.9	6.6									6.5	4.8	3.4	305
310										7.6	6.3									6.3	4.5	3.2	310
315										7.3	6										4.3	2.9	315
320										7	5.7										4	2.7	320
325										6.8	5.4										3.8	2.4	325
330											5.1										3.6		330
340											4.6										3.3		340
% I	92											92											I
% II	46											92											II
% III	46											92											III

* adapter / pièce d'adaptateur

TAB 118671.1/2

Lifting heights.
Hauteurs de levage.

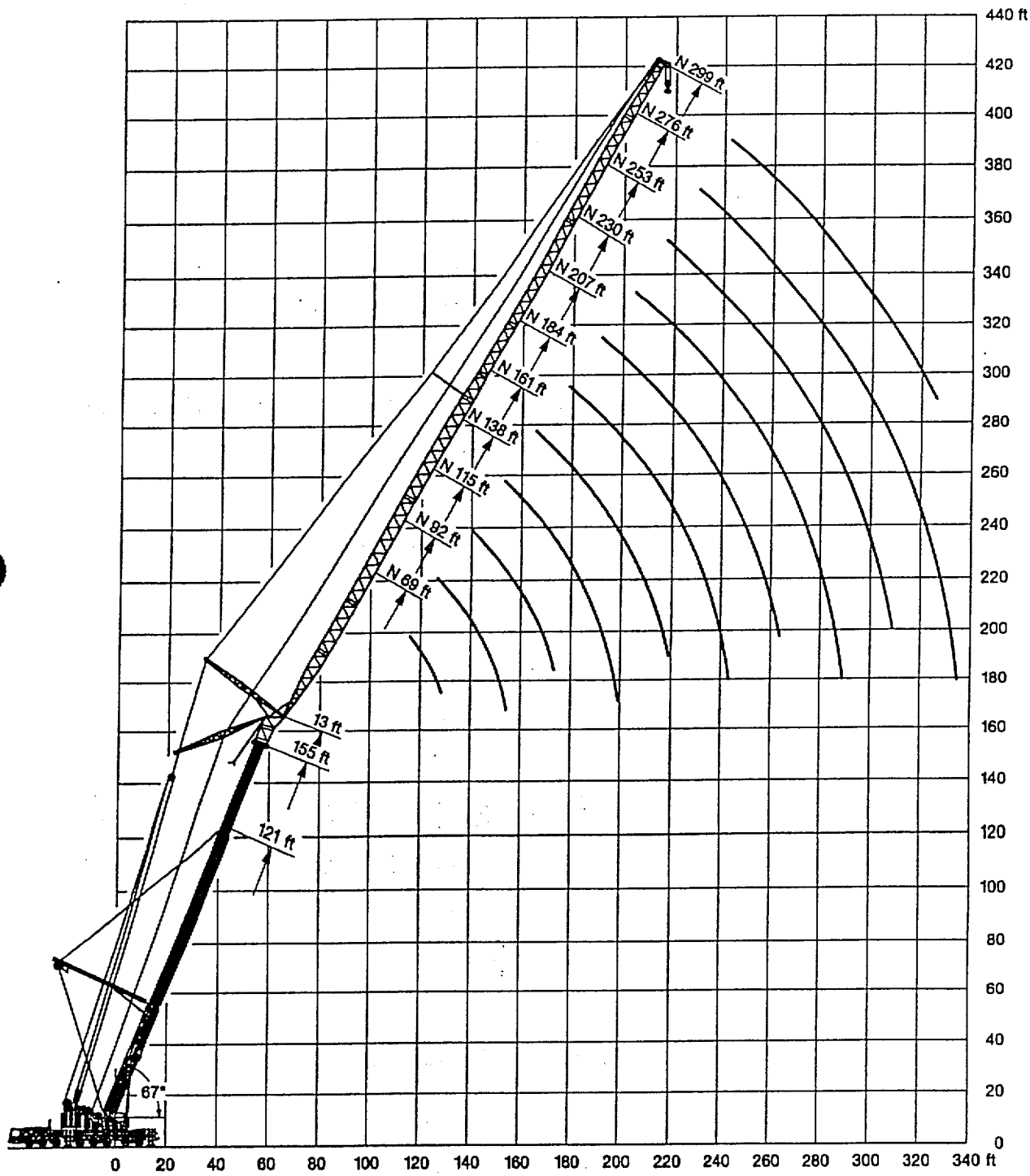

Telescopic boom / Flèche télescopique: 67°.

Lifting capacities on 276 ft long telescopic boom.
Forces de levage à la flèche télescopique de 276 ft.

LTM 1500

53 ft – 276 ft | 32'10" x 31'6" | 360° | 396800 lbs / 330700 lbs | 85%

ft	53 ft ¹	53 ft ²	53 ft	70 ft	87 ft	104 ft	121 ft	138 ft	ft
10	1081	1081	1081						10
11	947	947	947						11
12	830	830	830	542					12
13	729	729	729	543					13
14	642	642	642	540	439				14
15	577	575	571	534	426				15
16	575	566	549	525	414				16
17	563	550	528	512	403	397			17
18	542	531	509	497	392	386			18
20	503	492	471	465	372	365	308		20
22	471	460	439	434	355	347	292		22
24	441	431	410	404	338	330	280	238	24
26	414	405	384	378	322	313	268	228	26
28	391	377	360	354	308	299	257	219	28
30	369	351	338	332	295	284	246	210	30
32	350	327	318	312	283	272	236	202	32
34	331	308	300	294	271	260	226	195	34
36	312	290	284	278	261	249	216	188	36
38	293	272	268	262	251	238	206	181	38
40	276	256	253	247	240	227	197	174	40
45	242	224	224	217	215	201	176	159	45
50				191	190	182	161	144	50
55				170	168	164	148	129	55
60				149	150	146	137	116	60
65				123	134	131	126	107	65
70					121	121	117	99	70
75					109	110	107	91.5	75
80						100	97	84.5	80
85						91	87.5	77.5	85
90						83	79.5	73	90
95						75	72.5	68.5	95
100							66	64	100
105							59.9	59.3	105
110							54.8	54	110
115								49.2	115
120								44.9	120
125								40.8	125
130								36.8	130

%	53 ft	70 ft	87 ft	104 ft	121 ft	138 ft	%
I	0	46/ 0	46/ 0/ 0	92/46/46	92/92/ 0	92/46/ 0	I
II	0	0/ 0	46/ 0/ 0	46/92/46	92/46/ 0	92/92/ 0	II
III	0	0/ 0	0/ 0/ 0	0/ 0/46	0/46/ 0	46/92/ 0	III
IV	0	0/ 0	0/ 0/ 0	0/ 0/ 0	0/ 0/ 0	0/ 0/46	IV
V	0	0/ 0	0/46/ 0	0/ 0/ 0	0/ 0/92	0/ 0/92	V
VI	0	0/46	0/46/92	0/ 0/ 0	0/ 0/92	0/ 0/92	VI

¹ over rear, 396800 lbs counterweight / en arrière, contrepoids 396800 lbs
² over rear / en arrière

TAB 118001 / 118002 /118004.1/2

53 ft – 276 ft | 32'10" x 31'6" | 360° | 330700 lbs | 85%

ft	155 ft	172 ft	189 ft	206 ft	223 ft	241 ft	258 ft	276 ft	ft
28	185								28
30	176	153							30
32	171	147							32
34	165	142	125						34
36	159	138	121						36
38	154	133	117						38
40	148	129	114	99.5	88.5				40
45	135	119	105	92.5	83				45
50	124	109	97.5	86	77.5	68.5			50
55	114	101	90.5	80	73	65	57.9	43.4	55
60	105	92.5	84.5	75	68.5	61.5	55.1	41	60
65	96.5	85.5	78.5	70	64	57.7	52.4	38.7	65
70	88.5	79	73.5	65.5	60.5	54.4	49.7	36.4	70
75	82	73.5	68	61	56.8	51.3	47.1	34.2	75
80	77	68	63	56.8	53.5	48.3	44.7	32.1	80
85	72	62.5	57.8	52.7	50.4	45.5	42.4	30.2	85
90	67.5	58.9	54.5	49.3	47.5	42.9	40.2	28.4	90
95	63.5	55.6	51.5	46.1	44.4	40.3	38.1	26.7	95
100	59.6	52.5	48.6	43.1	41.3	37.7	36.1	25	100
105	55.9	49.6	45.9	40.3	38.4	35.3	34	23.1	105
110	52.3	46.8	43.4	37.5	35.6	33.2	31.7	21.1	110
115	48.9	44.1	41	34.9	33.1	31.1	29.6	19.4	115
120	45.4	41.3	38.7	32.4	30.9	29.1	27.7	17.8	120
125	41.6	38.6	36.6	30	29	27.2	26	16.5	125
130	38	36.1	34.5	27.7	27.2	25.4	24.4	15.2	130
135	34.5	33.6	32.4	25.9	25.4	23.7	22.8	14	135
140	31.4	31.2	30.4	24.4	23.7	22	21.2	12.8	140
145	20.8	28.9	28.5	22.9	22.1	20.3	19.8	11.6	145
150	19.1	26.6	26.6	21.5	20.5	18.7	18.3	10.5	150
155		24.4	24.6	20.2	18.9	17.2	17	9.5	155
160		19.2	22.6	18.9	17.4	16	15.6	8.4	160
165			20.7	17.6	16.1	15.1	14.4	7.5	165
170			18.8	16.4	15.2	14.2	13.7	7	170
175			17	15.2	14.3	13.4	13	6.5	175
180			10.6	13.9	13.4	12.6	12.3	6	180
185				12.7	12.6	11.9	11.6	5.5	185
190				11.8	11.8	11.1	11	5.1	190
195				11	11	10.4	10.4	4.6	195
200					10.2	9.7	9.8		200
205					9.4	9	9.2		205
210						8.3	8.6		210
215						7.6	8		215
220						7	7.5		220
225						5.3	6.9		225
230							6.4		230
235							5.9		235
240							5.4		240

%									
I	92/ 0/ 0	92/ 0/ 0	92/ 0/ 0	92/ 0/ 0	92/ 0	92/46	92	100	I
II	92/ 0/ 0	92/ 0/ 0	92/92/ 0	92/92/46	92/92	92/92	92	100	II
III	92/92/ 0	92/92/46	92/92/92	92/92/92	92/92	92/92	92	100	III
IV	0/92/92	46/92/92	46/92/92	92/92/92	92/92	92/92	92	100	IV
V	0/46/92	0/92/92	46/46/92	46/92/92	46/92	92/92	92	100	V
VI	0/46/92	0/46/92	0/46/92	0/46/92	46/92	46/92	92	100	VI

TAB 118004.2/3

Lifting capacities on 276 ft long telescopic boom.
Forces de levage à la flèche télescopique de 276 ft.

53 ft – 276 ft | 32'10" x 31'6" | 360° | 264550 lbs | 85%

ft	53 ft		70 ft	87 ft	104 ft	121 ft	138 ft	ft
	"							
10	578	578						10
11	578	578						11
12	578	578	542					12
13	578	578	543					13
14	578	570	540	439				14
15	574	558	534	426				15
16	557	535	524	414				16
17	538	514	509	403	397			17
18	519	495	489	392	386			18
20	481	457	452	372	365	306		20
22	446	425	419	355	347	292		22
24	412	395	389	338	330	280	238	24
26	378	367	360	322	313	268	228	26
28	350	343	336	308	299	257	219	28
30	325	320	313	295	284	246	210	30
32	303	300	294	283	272	236	202	32
34	285	283	276	269	259	226	195	34
36	268	267	260	255	248	216	188	36
38	251	251	244	241	236	206	181	38
40	236	236	229	228	224	197	174	40
45	206	206	198	197	193	176	159	45
50			173	172	168	161	144	50
55			152	150	148	146	129	55
60			134	132	134	131	116	60
65			119	117	119	116	107	65
70				105	106	103	99	70
75				94	95	92	90.5	75
80					85.5	82	81.5	80
85					77	73.5	73	85
90					69.5	66	65	90
95					63	59	58.4	95
100						52.9	52.3	100
105						47.5	48.7	105
110						42.8	45.7	110
115							41.9	115
120							38	120
125							34.3	125
130							31.1	130
I	0		46/ 0	46/ 0/ 0	92/46/ 0	92/92/ 0	92/46/ 0	I
II	0		0/ 0	46/ 0/ 0	46/46/ 0	92/46/ 0	92/92/ 0	II
III	0		0/ 0	0/ 0/ 0	0/46/ 0	0/46/ 0	46/92/ 0	III
IV	0		0/ 0	0/ 0/ 0	0/ 0/ 0	0/ 0/ 0	0/ 0/46	IV
V	0		0/ 0	0/46/ 0	0/ 0/46	0/ 0/92	0/ 0/92	V
% VI	0		0/46	0/46/92	0/ 0/92	0/ 0/92	0/ 0/92	VI %

" over rear / en arrière

TAB 118003 / 118005.1/2

53 ft – 276 ft | 32'10" x 31'6" | 360° | 264550 lbs | 85%

ft	155 ft	172 ft	189 ft	206 ft	223 ft	241 ft	258 ft	276 ft	ft
28	185								28
30	178	153							30
32	171	147							32
34	165	142	125						34
36	159	138	121						36
38	154	133	117						38
40	148	129	114	99.5	88.5				40
45	135	119	105	92.5	83				45
50	124	109	97.5	86	77.5	68.5			50
55	114	101	90.5	80	73	65	57.9	43.4	55
60	105	92.5	84.5	75	68.5	61.5	55.1	41	60
65	96.5	85.5	78.5	70	64	57.7	52.4	38.7	65
70	88.5	79	73.5	65.5	60.5	54.4	49.7	36.4	70
75	82	73.5	68	61	56.8	51.3	47.1	34.2	75
80	77	68	63	56.8	53.5	48.3	44.7	32.1	80
85	72	62.5	57.8	52.7	50.4	45.5	42.4	30.2	85
90	66	58.9	54.5	49.3	47.5	42.9	40.2	28.4	90
95	59.5	55.6	51.5	46.1	44.4	40.3	38.1	26.7	95
100	53.4	52.5	48.6	43.1	41.3	37.7	36.1	25	100
105	47.8	49.6	45.9	40.3	38.4	35.3	34	23.1	105
110	42.9	45	43.4	37.5	35.6	33.2	31.7	21.1	110
115	38.4	40.6	41	34.9	33.1	31.1	29.6	19.4	115
120	34.3	36.5	38.4	32.4	30.9	29.1	27.7	17.8	120
125	30.5	32.7	35.2	30	29	27.2	26	16.5	125
130	27.1	29.2	31.8	27.7	27.2	25.4	24.4	15.2	130
135	24.4	26.2	28.6	25.9	25.4	23.7	22.8	14	135
140	22.6	24.7	25.6	24.4	23.7	22	21.2	12.8	140
145	20.8	23.3	22.7	22.9	22.1	20.3	19.8	11.6	145
150	19.1	21.9	20.1	21.2	20.5	18.7	18.3	10.5	150
155		20.5	17.7	18.8	18.9	17.2	17	9.5	155
160		19.2	16.2	17	17.4	16	15.6	8.4	160
165			14.7	16	16	15.1	14.4	7.5	165
170			13.3	15.1	14.8	14.2	13.7	7	170
175			11.9	14.3	12.7	13.4	13	6.5	175
180			10.6	13.4	11	12.2	12.3	6	180
185				12.6	9.7	10.9	11.6	5.5	185
190				11.8	8.7	9.7	11	5.1	190
195				11	8.1	8.6	10.2	4.6	195
200					7.5	7.9	9.3		200
205					6.9	7.4	8.3		205
210						6.8	7.3		210
215						6.3	6.4		215
220						5.8	5.6		220
225						5.3	4.8		225
I	92/ 0/ 0	92/ 0/ 0	92/ 0/ 0	92/ 0/ 0	92/ 0	92/46	92	100	I
II	92/ 0/ 0	92/ 0/ 0	92/92/ 0	92/92/46	92/92	92/92	92	100	II
III	92/92/ 0	92/92/46	92/92/92	92/92/92	92/92	92/92	92	100	III
IV	0/92/92	46/92/92	46/92/92	92/92/92	92/92	92/92	92	100	IV
V	0/46/92	0/92/92	46/46/92	46/92/92	46/92	92/92	92	100	V
% VI	0/46/92	0/46/92	0/46/92	0/46/92	46/92	46/92	92	100	VI %

TAB 118005.2/3

Lifting capacities on 276 ft long telescopic boom.
Forces de levage à la flèche télescopique de 276 ft.

LTM 1500

53 ft – 276 ft | 32'10" x 31'6" | 360° | 231500 lbs | 85%

ft	53 ft	70 ft	87 ft	104 ft	121 ft	138 ft	ft
10	578						10
11	578						11
12	578	542					12
13	578	543					13
14	566	540	439				14
15	550	533	426				15
16	527	519	414				16
17	507	501	403	397			17
18	487	481	392	386			18
20	449	443	372	365	306		20
22	416	409	355	347	292		22
24	385	378	338	330	280	238	24
26	356	350	322	313	268	228	26
28	333	326	308	299	257	219	28
30	310	304	294	284	246	210	30
32	290	284	280	272	236	202	32
34	273	266	264	257	226	195	34
36	256	249	248	242	216	188	36
38	240	233	231	227	206	181	38
40	225	218	216	212	197	174	40
45	195	187	186	182	176	159	45
50		162	161	158	157	144	50
55		141	140	141	138	129	55
60		124	122	124	121	116	60
65		116	108	109	108	105	65
70			95.5	97	93.5	93	70
75			85	86	83	82	75
80				76.5	73	72.5	80
85				68.5	65	64.5	85
90				61.5	57.9	59	90
95				55.6	51.5	54.6	95
100					45.8	49.7	100
105					40.6	44.5	105
110					38.2	40	110
115						35.7	115
120						31.6	120
125						29	125
130						27.4	130
I	0	46/ 0	46/ 0/ 0	92/46/ 0	92/ 0/ 0	92/46/ 0	I
II	0	0/ 0	46/ 0/ 0	46/46/ 0	92/ 0/ 0	92/92/ 0	II
III	0	0/ 0	0/ 0/ 0	0/46/ 0	0/ 0/ 0	46/92/ 0	III
IV	0	0/ 0	0/ 0/ 0	0/ 0/ 0	0/92/ 0	0/ 0/46	IV
V	0	0/ 0	0/46/ 0	0/ 0/46	0/46/92	0/ 0/92	V
% VI	0	0/46	0/46/92	0/ 0/92	0/46/92	0/ 0/92	VI %

TAB 118006.1/2

53 ft – 276 ft | 32'10" x 31'6" | 360° | 231500 lbs | 85%

ft	155 ft	172 ft	189 ft	206 ft	223 ft	241 ft	258 ft	276 ft	ft
28	185								28
30	178	153							30
32	171	147							32
34	165	142	125						34
36	159	138	121						36
38	154	133	117						38
40	148	129	114	99.5	88.5				40
45	135	119	105	92.5	83				45
50	124	109	97.5	86	77.5	68.5			50
55	114	101	90.5	80	73	65	57.9	43.4	55
60	105	92.5	84.5	75	68.5	61.5	55.1	41	60
65	96.5	85.5	78.5	70	64	57.7	52.4	38.7	65
70	88.5	79	73.5	65.5	60.5	54.4	49.7	36.4	70
75	81	73.5	68	61	56.8	51.3	47.1	34.2	75
80	74	68	63	56.8	53.5	48.3	44.7	32.1	80
85	65.5	62.5	57.8	52.7	50.4	45.5	42.4	30.2	85
90	58.4	58.9	54.5	49.3	47.5	42.9	40.2	28.4	90
95	52	54	51.5	46.1	44.4	40.3	38.1	26.7	95
100	46.2	48.5	48.6	43.1	41.3	37.7	36.1	25	100
105	41	43.2	45.8	40.3	38.4	35.3	34	23.1	105
110	36.4	38.6	41.2	37.5	35.6	33.2	31.7	21.1	110
115	32.3	34.4	37	34.9	33.1	31.1	29.6	19.4	115
120	30.2	30.9	33.1	32.4	30.9	29.1	27.7	17.8	120
125	28.2	29.3	28.5	30	29	27.2	26	16.5	125
130	26.3	27.7	26.2	27.4	27.2	25.4	24.4	15.2	130
135	24.4	26.2	24	24.4	25.4	23.7	22.8	14	135
140	22.6	24.7	22.3	21.5	23.6	22	21.2	12.8	140
145	20.8	23.3	20.7	19.9	21.7	20.3	19.8	11.6	145
150	19.1	21.9	19.2	18.9	19.1	18.7	18.3	10.5	150
155		20.5	17.7	17.9	16.6	17.2	17	9.5	155
160		19.2	16.2	17	14.2	15.6	15.6	8.4	160
165			14.7	16	12	13.8	14.4	7.5	165
170			13.3	15.1	11.3	11.6	13.7	7	170
175			11.9	14.3	10.6	10.9	12.1	6.5	175
180			10.6	13.4	10	10.3	10.7	6	180
185				12.6	9.3	9.7	9.5	5.5	185
190				11.8	8.7	9.1	8.4	5.1	190
195				11	8.1	8.5	7.4	4.6	195
200					7.5	7.9	6.4		200
205					6.9	7.4	5.5		205
210						6.8			210
215						6.2			215
220						5.8			220
225						4.4			225
I	92/ 0/ 0	92/ 0/ 0	92/ 0/ 0	92/ 0/ 0	92/ 0	92/46	92	100	I
II	92/ 0/ 0	92/ 0/ 0	92/92/ 0	92/92/46	92/92	92/92	92	100	II
III	92/92/ 0	92/92/46	92/92/92	92/92/92	92/92	92/92	92	100	III
IV	0/92/92	46/92/92	46/92/92	92/92/92	92/92	92/92	92	100	IV
V	0/46/92	0/92/92	46/46/92	46/92/92	46/92	92/92	92	100	V
% VI	0/46/92	0/46/92	0/46/92	0/46/92	46/92	46/92	92	100	VI %

TAB 118006.2/3

Lifting capacities on 276 ft long telescopic boom.
Forces de levage à la flèche télescopique de 276 ft.

LTM 1500

53 ft – 276 ft | 32'10" x 31'6" | 360° | 198420 lbs | 85%

ft	53 ft	70 ft	87 ft	104 ft	121 ft	138 ft	ft
10	578						10
11	578						11
12	578	542					12
13	578	543					13
14	562	540	439				14
15	542	532	426				15
16	520	513	414				16
17	499	493	403	397			17
18	479	473	392	386			18
20	440	433	372	365	306		20
22	405	398	355	347	292		22
24	374	367	338	330	280	238	24
26	346	339	322	313	268	228	26
28	322	315	307	299	257	219	28
30	299	292	290	283	246	210	30
32	278	271	270	265	236	202	32
34	260	253	252	248	226	195	34
36	244	237	235	231	216	188	36
38	227	220	219	215	206	181	38
40	212	205	203	200	197	174	40
45	182	174	173	173	171	159	45
50		150	149	150	147	142	50
55		132	128	130	127	124	55
60		123	111	112	109	107	60
65		114	97	98.5	95	93	65
70			85.5	86.5	83.5	81.5	70
75			77	76.5	73	74.5	75
80				67.5	64	68	80
85				58.7	55.5	60.5	85
90				52.1	48.1	53.2	90
95				48.7	45.3	46.6	95
100					42.8	40.7	100
105					40.4	36	105
110					38.2	34.2	110
115						32.4	115
120						30.7	120
125						29	125
130						27.4	130
I	0	46/ 0	46/ 0/ 0	92/ 0/ 0	92/ 0/ 0	92/ 0/ 0	I
II	0	0/ 0	46/ 0/ 0	46/ 0/ 0	92/ 0/ 0	92/ 0/ 0	II
III	0	0/ 0	0/ 0/ 0	0/ 0/ 0	0/ 0/ 0	46/ 0/ 0	III
IV	0	0/ 0	0/ 0/ 0	0/ 0/ 0	0/92/ 0	0/92/46	IV
V	0	0/ 0	0/46/ 0	0/92/46	0/46/92	0/92/92	V
% VI	0	0/46	0/46/92	0/46/92	0/46/92	0/46/92	VI %

TAB 118007.1/2

53 ft – 276 ft | 32'10" x 31'6" | 360° | 198420 lbs | 85%

↔ ft	155 ft	172 ft	189 ft	206 ft	223 ft	241 ft	258 ft	276 ft	↔ ft
28	185								28
30	178	153							30
32	171	147							32
34	165	142	125						34
36	159	138	121						36
38	154	133	117						38
40	148	129	114	99.5	88.5				40
45	135	119	105	92.5	83				45
50	124	109	97.5	86	77.5	68.5			50
55	114	101	90.5	80	73	65	57.9	43.4	55
60	104	92.5	84.5	75	68.5	61.5	55.1	41	60
65	91.5	85.5	78.5	70	64	57.7	52.4	38.7	65
70	80.5	79	73.5	65.5	60.5	54.4	49.7	36.4	70
75	70.5	71.5	68	61	56.8	51.3	47.1	34.2	75
80	62	63.5	62.5	56.8	53.5	48.3	44.7	32.1	80
85	54.8	56	57.5	52.7	50.4	45.5	42.4	30.2	85
90	48.4	49.8	51.5	49.3	47.5	42.9	40.2	28.4	90
95	42.6	44.1	46	45.6	44.4	40.3	38.1	26.7	95
100	39	39	41	41.6	41.3	37.7	36.1	25	100
105	36.6	35.8	36.4	37.1	38.4	35.3	34	23.1	105
110	34.4	34.1	33.3	33.2	35.3	33.3	31.7	21.1	110
115	32.3	32.4	31.2	29.6	32	31.1	29.6	19.4	115
120	30.2	30.9	29.3	26.9	28.7	29.1	27.7	17.8	120
125	28.2	29.3	27.4	25.1	25.7	27.1	26	16.5	125
130	26.3	27.7	25.7	23.3	22.9	24.3	24.4	15.2	130
135	24.4	26.2	24	22.1	20.3	21.8	22.8	14	135
140	22.6	24.7	22.3	21	18.5	19.4	21.2	12.8	140
145	20.8	23.3	20.7	19.9	17.1	17.9	19.4	11.6	145
150	19.1	21.9	19	18.9	15.7	16.4	17.4	10.5	150
155		20.5	17.1	17.9	14.4	15	15.5	9.5	155
160		19.2	15.2	17	13.1	13.5	13.3	8.4	160
165			13.9	16	12	12.3	11.2	7.5	165
170			12.7	15.1	11.3	11.6	9.9	7	170
175			11.6	14.3	10.6	10.9	8.6	6.5	175
180			10.5	13.4	10	9.9	7.4	6	180
185				12.6	9.3	8.8	6.2		185
190				11.8	8.7	7.4	5		190
195				10.8	8.1	6.2			195
200					7.3	5			200
205					6.4				205
I	92/ 0/ 0	92/ 0/ 0	92/ 0/ 0	92/ 0/ 0	92/ 0	92/46	92	100	I
II	92/ 0/ 0	92/ 0/ 0	92/92/ 0	92/92/46	92/92	92/92	92	100	II
III	92/92/ 0	92/92/46	92/92/92	92/92/92	92/92	92/92	92	100	III
IV	0/92/92	46/92/92	46/92/92	92/92/92	92/92	92/92	92	100	IV
V	0/46/92	0/92/92	46/46/92	46/92/92	46/92	92/92	92	100	V
% VI	0/46/92	0/46/92	0/46/92	0/46/92	46/92	46/92	92	100	VI %

TAB 118007.2/3

Lifting heights.
Hauteurs de levage.

276 ft telescopic boom.
Flèche télescopique de 276 ft.

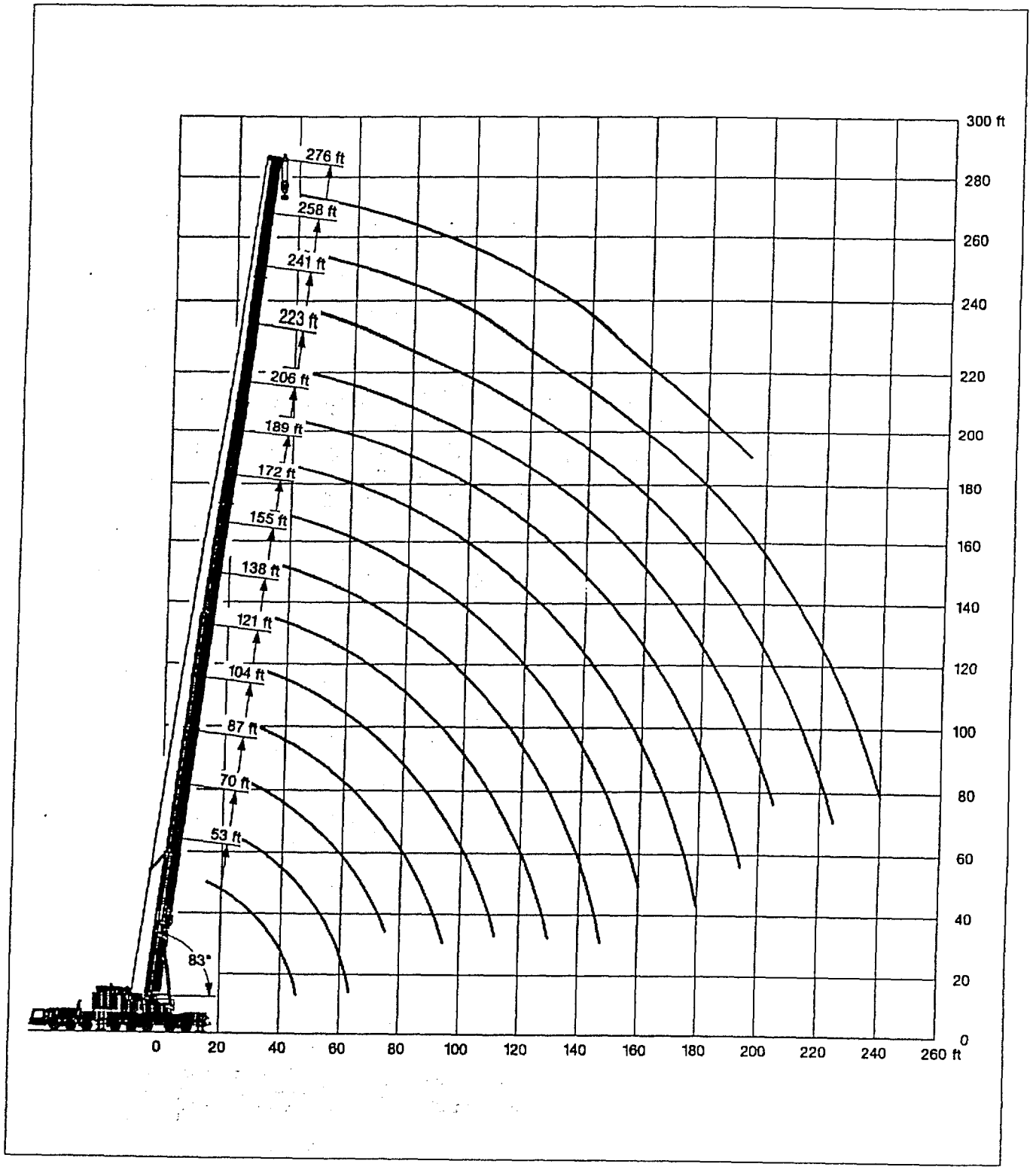

Lifting capacities on guyed telescopic boom.
Forces de levage à la flèche télescopique haubanée.

LTM 1500

104 ft – 258 ft | 32'10" x 31'6" | 360° | 396800 lbs | 85%

ft	104 ft	121 ft	138 ft	155 ft	172 ft	189 ft	206 ft	223 ft	241 ft	258 ft	ft
20		376									20
22		373									22
24	394	367	302	250							24
26	378	358	299	248							26
28	356	342	297	245	203						28
30	335	325	294	243	201	172					30
32	317	306	289	241	199	170					32
34	301	291	279	239	198	169	140	120			34
36	287	277	267	236	197	168	139	120			36
38	273	263	254	234	195	167	138	119			38
40	260	250	243	230	194	166	137	118	99		40
45	232	223	217	210	191	163	134	116	97		45
50	206	202	195	191	182	159	132	114	95.5	80.5	50
55	184	181	177	174	170	155	130	112	94	79	55
60	164	162	161	159	157	149	128	110	92.5	78	60
65	148	146	147	146	144	141	125	108	90.5	76	65
70	134	131	132	134	133	132	122	105	88.5	74.5	70
75	121	119	120	122	123	122	118	103	86.5	73	75
80	109	107	108	111	113	114	112	101	85	72	80
85	99	97	98	101	103	106	105	99.5	83	70.5	85
90	90	88.5	89.5	92	94.5	97	98	97	81.5	69.5	90
95	75	80.5	81.5	84	86.5	89.5	91	92	80.5	68.5	95
100		73	74	76.5	79	82	83.5	86	79	67	100
105		66	67.5	70	72.5	75.5	77	80	77.5	66	105
110		57.8	61.5	64	66.5	69.5	71	74	75	64.5	110
115			54.8	58.3	61	64	65.5	68.5	70.5	63.5	115
120			47.6	53.2	55.9	58.9	60.5	63.5	65.5	62.5	120
125				48.5	51.2	54.2	56	58.8	60.5	61.5	125
130				44.2	46.9	50	51.7	54.6	56.5	58.3	130
135				40.2	42.9	46	47.8	50.7	52.6	54.7	135
140				35.1	39.2	42.3	44.1	47	48.9	51	140
145					35.4	38.8	40.6	43.5	45.4	47.6	145
150					30.2	35.6	37.4	40.3	42.3	44.4	150
155					25.1	32.5	34.4	37.3	39.3	41.4	155
160						28.8	31.5	34.5	36.5	38.6	160
165						24.6	28.9	31.8	33.8	36	165
170						20.5	26.3	29.3	31.3	33.5	170
175						16.6	23.4	27	28.9	31.1	175
180							20	24.7	26.7	28.9	180
185							16.3	22.4	24.5	26.8	185
190							12.7	19.7	22.5	24.7	190
195								16.7	20.5	22.8	195
200								13.7	18.6	21	200
205								10.7	16.7	19.2	205
210									14.9	17.4	210
215									13	15.7	215
220									10.7	14	220
225										12	225
230										9.8	230
235										7.7	235
240										5.6	240
I	46	92	92	92	92	92	92	92	92	92	I
II	46	46	92	92	92	92	92	92	92	92	II
III	46	46	46	92	92	92	92	92	92	92	III
IV	0	0	0	0	46	46	92	92	92	92	IV
V	0	0	0	0	0	46	46	46	92	92	V
% VI	0	0	0	0	0	0	0	46	46	92	VI %

TAB 118039

Lifting capacities on guyed telescopic boom.
Forces de levage à la flèche télescopique haubanée.

LTM 1500

104 ft – 258 ft | 32'10" x 31'6" | 360° | 330700 lbs | 85%

ft	104 ft	121 ft	138 ft	155 ft	172 ft	189 ft	206 ft	223 ft	241 ft	258 ft	ft
15	429										15
16	427										16
17	424										17
18	422										18
20	417	376									20
22	407	373									22
24	394	367	302	250							24
26	378	358	299	248							26
28	356	342	297	245	203						28
30	335	325	294	243	201	172					30
32	316	306	289	241	199	170					32
34	299	290	279	239	198	169	140	120			34
36	282	276	267	236	197	168	139	120			36
38	266	262	254	234	195	167	138	119			38
40	250	248	243	230	194	166	137	118	98		40
45	219	217	217	210	191	163	134	116	97		45
50	193	191	192	190	182	159	132	114	95.5	80.5	50
55	171	169	169	171	169	155	130	112	94	79	55
60	151	149	150	152	152	148	128	110	92.5	78	60
65	135	133	134	136	138	137	125	108	90.5	76	65
70	121	119	120	122	124	125	121	105	88.5	74.5	70
75	109	106	107	110	112	114	113	103	86.5	73	75
80	97.5	95.5	96.5	99	101	104	104	101	85	72	80
85	87.5	86	87	89	91.5	94.5	95.5	96	83	70.5	85
90	79	77.5	78.5	81	83.5	86.5	88	89	81.5	69.5	90
95	69	69.5	71	73	76	79	80.5	82.5	80	68.5	95
100		62.5	63.5	66	69	72	73.5	76.5	78.5	67	100
105		56.1	57.3	59.7	62.5	65.5	67	70	71.5	66	105
110		50.3	51.6	54.1	56.8	59.8	61.5	64.5	66	64.5	110
115			46.4	48.8	51.6	54.6	56.4	59.3	61	62	115
120			41.5	44	46.7	49.6	51.6	54.5	56.5	58.6	120
125				39.5	42.3	45.4	47.2	50.1	52	54.2	125
130				35.5	38.2	41.4	43.2	46.1	48.1	50.2	130
135				31.7	34.5	37.6	39.4	42.4	44.4	46.5	135
140				28.1	31	34.1	35.9	38.9	40.9	43.1	140
145					27.7	30.9	32.6	35.7	37.6	39.8	145
150					24.5	27.8	29.6	32.6	34.6	36.8	150
155					21.6	24.9	26.8	29.8	31.8	34	155
160						22.2	24.1	27.2	29.2	31.4	160
165						19.5	21.4	24.6	26.6	28.9	165
170						17	18.9	22.2	24.2	26.5	170
175						14.5	16.5	19.9	21.9	24.3	175
180							14.1	17.6	19.8	22.1	180
185							11.9	15.4	17.6	20.1	185
190							10.2	13.2	15.5	18.1	190
195								11.4	13.5	16.1	195
200								9.9	11.7	14.2	200
205								8.7	10.2	12.4	205
210									9.1	10.8	210
215									8	9.7	215
220									6.9	8.7	220
225										7.7	225
230										6.7	230
235										5.8	235
240										4.9	240
% I	46	92	92	92	92	92	92	92	92	92	I
% II	46	46	92	92	92	92	92	92	92	92	II
% III	46	46	46	92	92	92	92	92	92	92	III
% IV	0	0	0	0	46	46	92	92	92	92	IV
% V	0	0	0	0	0	46	46	46	92	92	V
% VI	0	0	0	0	0	0	0	46	46	92	VI

TAB 118040

Lifting heights.
Hauteurs de levage.

Guyed telescopic boom.
Flèche télescopique haubanée.

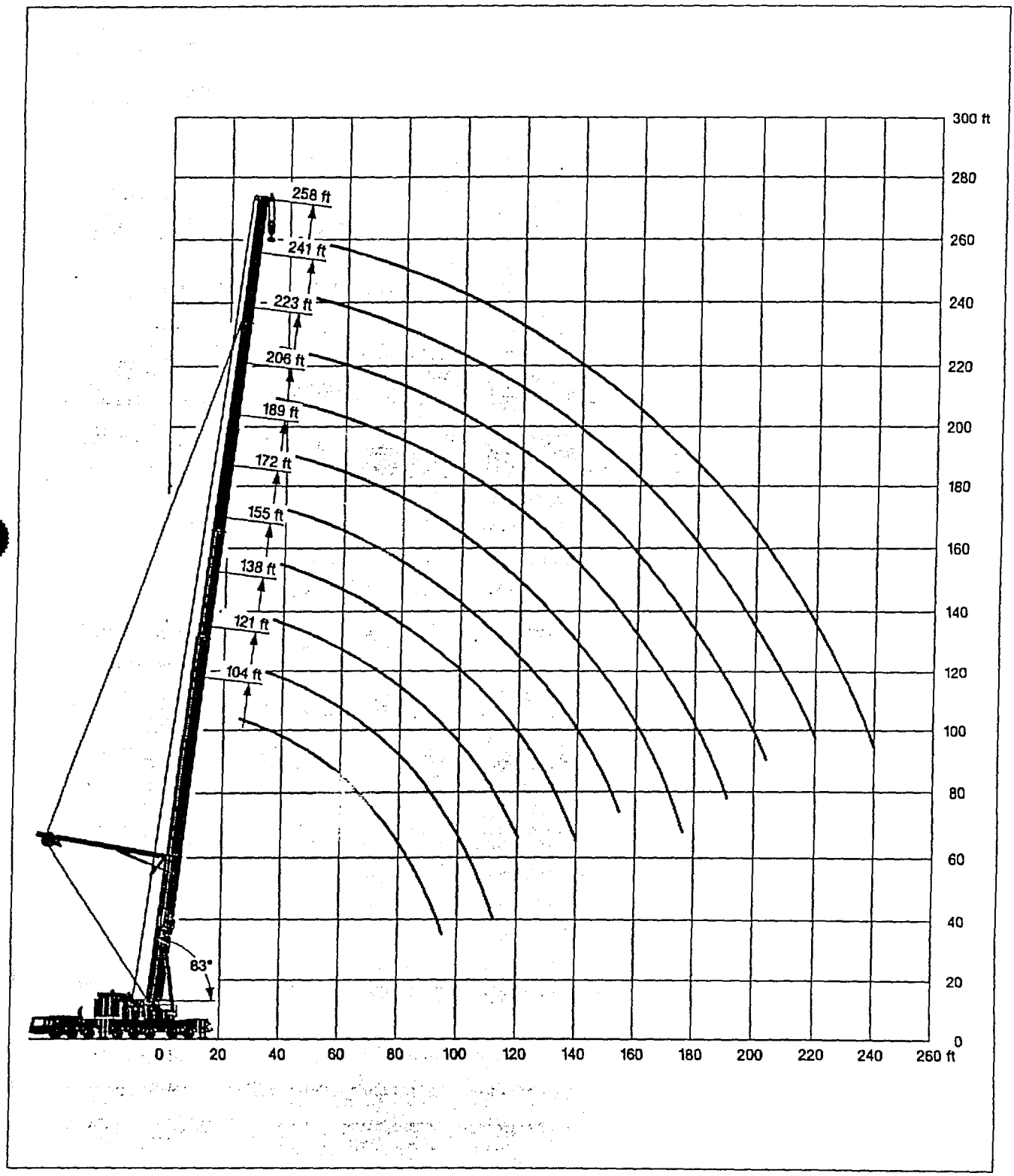

Lifting capacities on the lattice fly jib.
Forces de levage à la fléchette treillis fixe.

LTM 1500

155 ft – 258 ft | 0° 46 ft – 184 ft | 32'10" x 31'6" | 360° | 330700 lbs | 85%

ft	155 ft + 7 ft*							189 ft + 7 ft*						ft
	46 ft	69 ft	92 ft	115 ft	138 ft	161 ft	184 ft	46 ft	69 ft	92 ft	115 ft	138 ft	161 ft	
40	81.5	58.7												40
45	75.5	54.6												45
50	70.5	50.8	39.3	31.7				67	48.2					50
55	66	47.6	36.7	29.7	23.5			63	45.8	35.2				55
60	62.5	44.8	34.3	27.7	22	18.1	13.7	59.1	43.5	33.4	25.5	19.7		60
65	58.9	42.2	32.3	25.9	20.6	16.8	12.7	55.3	41.4	31.8	24.2	18.7		65
70	55.8	39.9	30.5	24.4	19.2	15.7	11.8	51.8	39.4	30.3	23	17.7	14.1	70
75	52.9	37.8	28.9	23.1	18.1	14.7	10.9	48.6	37.7	28.8	21.8	16.8	13.3	75
80	50.1	35.7	27.3	21.8	17	13.7	10	45.6	36	27.4	20.7	16	12.6	80
85	47.2	33.8	25.8	20.6	16.1	12.9	9.2	42.7	34.5	26.2	19.8	15.1	11.9	85
90	44.2	31.6	24.4	19.5	15.2	12.1		40.1	33.1	25	18.9	14.4	11.2	90
95	41.8	29.8	22.8	18.3	14.3	11.3		37.1	31.7	24	18	13.7	10.6	95
100	39.9	28.3	21.2	17	13.3	10.5		34.2	30.4	22.9	17.2	13	10	100
105	38.1	26.8	20	15.7	12.2	9.5		31.8	29.1	22	16.4	12.3	9.4	105
110	36.4	25.5	19	14.4	11.1	8.6		29.5	27.2	20.8	15.4	11.7	8.8	110
115	34.7	24.2	17.9	13.5	10.1	7.8		27.3	25.2	19.6	14.4	10.9	8.2	115
120	32.7	22.9	17	12.8	9.3	7		25.2	23.4	18.5	13.5	10.1	7.6	120
125	30.4	21.7	16	12.1	8.8			23.2	21.6	17.7	12.5	9.4	7	125
130	28.1	20.5	15.1	11.5	8.4			21.2	19.9	17	11.6	8.6	6.5	130
135	26.4	19.7	14.3	10.9	7.9			19.4	18.3	16.3	11.1	8.2		135
140	24.9	19.1	13.4	10.3	7.5			17.6	16.7	15.5	10.6	7.8		140
145	23.5	18.5	12.6	9.8	7.1			15.9	15.2	14.8	10.2	7.4		145
150	21.9	17.9	11.8	9.3	6.7			14.9	13.7	13.5	9.8	7.1		150
155	20.4	17.3	11.4	8.7	6.3			13.9	12.3	12.4	9.4	6.7		155
160	19	16.7	11	8.2	5.9			13	10.9	11.3	9	6.4		160
165	17.5	16.2	10.7	7.7	5.5			12.1	9.7	10.1	8.6	6.1		165
170	16.2	15.7	10.3	7.2	5.2			11.3	9	9.1	8.3	5.8		170
175	14.8	15.2	10	7				10.4	8.4	8	7.6	5.4		175
180	13.2	14.3	9.7	6.7				9.6	7.8	7	6.9	5.1		180
185	11.6	13.2	9.4	6.5				8.8	7.2	6.1	6.2	4.9		185
190	10.1	12.1	9.1	6.2				8.1	6.6	5.6	5.4	4.6		190
195		10.8	8.8	6				7.3	6	5.1	4.7			195
200		9.6	8.5	5.8				6.6	5.5	4.7				200
205		8.5	8.2	5.6				5.9	4.9					205
210		7.4	8	5.3				5.2						210
215		6.5	7.4	5.1				4.5						215
220			6.6	4.9										220
225			5.8	4.7										225
230			5	4.6										230
235			4.2	4.4										235
240				4.1										240
I	92							92						I
II	92							92						II
III	92							92						III
IV	0							46						IV
V	0							46						V
% VI	0							0						VI %

* adapter / pièce d'adaptateur

TAB 118057.1/2

155 ft – 258 ft | 0° 46 ft – 184 ft | 32'10" x 31'6" | 360° | 330700 lbs | 85%

ft	223 ft + 7 ft*						258 ft + 7 ft*					ft
	46 ft	69 ft	92 ft	115 ft	138 ft	161 ft	46 ft	69 ft	92 ft	115 ft	138 ft	
55	47.2											55
60	44.9	38	29				32.2					60
65	42.6	36.4	27.9				30.9					65
70	40.2	34.9	26.9	20.1			29.6	24.7				70
75	37.8	33.2	25.8	19.3	15.7		28.2	23.5	19.3			75
80	35.7	31.4	24.8	18.4	15	10.5	26.8	22.3	18.4	15.5		80
85	33.6	29.7	23.9	[illegible]	14.4	10	25.4	21.1	17.4	14.7		85
90	31.7	28.1	23	[illegible]	13.7	9.4	24.1	20.1	16.5	13.9	10.8	90
95	29.8	26.5	22.1	[illegible]	13.1	8.9	22.9	19	15.6	13.1	10.1	95
100	27.9	24.9	21.2	[illegible]	12.6	8.5	21.8	18	14.7	12.2	9.4	100
105	25.7	23.2	20.2	15	12.1	8	20	16.7	13.6	11.4	8.8	105
110	23.6	21.3	18.6	14.4	11.6	7.5	18.3	15.4	12.6	10.6	8.2	110
115	21.5	19.4	16.9	13.6	11.1	7.1	16.7	14.1	11.6	9.8	7.6	115
120	19.6	17.6	15.5	12.7	10.6		15.1	12.8	10.6	9.1	7	120
125	18.1	15.9	14.4	11.7	10		13.6	11.5	9.5	8.4		125
130	16.6	14.2	13.3	10.4	9.4		12.6	10.2	8.5	7.7		130
135	15.2	13.1	12.3	9.5	8.8		11.6	9.2	7.7	7		135
140	13.9	12.1	11.3	8.7	8.2		10.7	8.4	7.1	6.2		140
145	12.6	11.2	10.4	8	7.3		9.8	7.7	6.4			145
150	11.3	10.4	9.5	7.3	6.6		9	7	5.8			150
155	10.1	9.6	8.6	6.7	6		8.2	6.3				155
160	9	8.8	7.7	6.1			7.4					160
165	7.8	8	6.9				6.6					165
170	6.7	7.2	6.1				5.8					170
175	6	6.5	5.3									175
180	5.4	5.8										180

%	223 ft + 7 ft*	258 ft + 7 ft*	%
I	92	92	I
II	92	92	II
III	92	92	III
IV	92	92	IV
V	46	92	V
VI	46	92	VI

*adapter / pièce d'adaptateur

TAB 118057.3/4

Lifting capacities on the lattice fly jib.
Forces de levage à la fléchette treillis fixe.

LTM 1500

155 ft – 258 ft | 20° 46 ft – 115 ft | 32'10" x 31'6" | 360° | 330700 lbs | 85%

ft	155 ft + 7 ft*				189 ft + 7 ft*				223 ft + 7 ft*				258 ft + 7 ft*				ft
	46 ft	69 ft	92 ft	115 ft	46 ft	69 ft	92 ft	115 ft	46 ft	69 ft	92 ft	115 ft	46 ft	69 ft	92 ft	115 ft	
50	46.3																50
55	44				45.3												55
60	41.8	29.5			43.7				40.9								60
65	39.7	28			41.9				39.8								65
70	38.1	26.6			40.2	26.5			38.7				30				70
75	36.6	25.2	19.3		38.6	25.4			37.4	24.2			28.7				75
80	35.1	24	18.3		37.1	24.3	18.1		36.2	23.3			27.4	22.7			80
85	33.8	23	17.3		35.8	23.3	17.3		35.1	22.5			26	21.9			85
90	32.6	22.1	16.3	11.8	34.7	22.4	16.5		33.4	21.7	15.6		24.8	20.9			90
95	31.4	21.2	15.5	11.1	33.6	21.6	15.7	11.1	31.6	20.9	15	10.1	23.5	19.9	13.6		95
100	30.3	20.4	14.9	10.4	32.6	20.8	14.9	10.6	29.7	20.3	14.3	9.7	22.2	18.8	13.1		100
105	29.2	19.6	14.2	9.8	31.6	20.1	14.4	10.1	27.7	19.7	13.7	9.4	20.7	17.6	12.7	8.5	105
110	28.2	18.8	13.6	9.4	30.7	19.5	13.8	9.6	25.7	19.1	13.2	9	19.4	16.5	12.3	8.2	110
115	27.2	18.1	13.1	9	29.2	18.8	13.2	9.1	23.8	18.5	12.7	8.7	18.1	15.5	12	8	115
120	26.4	17.4	12.5	8.6	27.4	18.2	12.7	8.7	21.9	18	12.2	8.4	16.8	14.5	11.6	7.7	120
125	25.9	16.7	12	8.3	25.3	17.6	12.2	8.4	20	17.5	11.7	8.1	15.3	13.5	11.3	7.5	125
130	25.4	16	11.5	7.9	23.3	17	11.8	8.1	18.3	16.8	11.2	7.8	13.9	12.6	10.5	7.3	130
135	25	15.5	11	7.6	21.3	16.5	11.3	7.8	16.6	15.4	10.8	7.5	12.9	11.7	9.7	7	135
140	24.5	15.1	10.6	7.3	19.7	15.9	10.9	7.5	14.9	13.9	10.3	7.3	12	10.8	9	6.8	140
145	24	14.7	10.1	7	18.5	15.4	10.4	7.2	13.3	12.5	9.9	7	11.2	9.9	8.2	6.6	145
150	23.6	14.3	9.7	6.7	17.3	15	10.2	7	12.4	11	9.5	6.8	10.3	8.9	7.7	6.4	150
155	22.2	13.9	9.4	6.4	16.2	14.4	9.9	6.7	11.4	10.1	9.2	6.6	9.5	8.2	7.2	5.9	155
160	20.6	13.5	9.1	6.1	15.1	13.5	9.6	6.5	10.5	9.4	8.6	6.4	8.7	7.5	6.7	5.5	160
165	18.9	13.1	8.9	5.9	14.1	12.3	9.4	6.2	9.6	8.6	7.9	6.2	8	6.8	6.1		165
170	17.3	12.7	8.6	5.6	13.1	11.2	9.1	6	8.7	7.9	7.2	6	7.2	6.1	5.5		170
175	15.8	12.4	8.4	5.4	12.1	10.1	8.9	5.8	7.9	7.2	6.5	5.8	6.5	5.5	4.9		175
180	14.3	12	8.2	5.3	11.1	9	8.7	5.5	7.1	6.5	5.8	5.5	5.8				180
185		11.7	8	5.1	10.2	8.1	8.3	5.3	6.3	5.9	5.2	5.2					185
190		11.4	7.7	5	9.3	7.6	7.5	5.2	5.5	5.2	4.5	4.6					190
195		10.5	7.5	4.9	8.4	7	6.7	5	4.8								195
200		9.6	7.3	4.7	7.6	6.5	6	4.9									200
205		8.7	7.1	4.6	6.7	5.9	5.5	4.7									205
210			6.9	4.5	5.9	5.4	5.1	4.6									210
215			6.9	4.4	5.1	4.9	4.6	4.2									215
220			6.5	4.2		4.5											220
225			6	4.1													225
230				4													230
235				3.9													235
240				3.8													240
245				3.7													245
% I	92				92				92				92				I
% II	92				92				92				92				II
% III	92				92				92				92				III
% IV	0				46				92				92				IV
% V	0				46				46				92				V
% VI	0				0				46				92				VI %

* adapter / pièce d'adaptateur

TAB 118065.1/2/3/4

155 ft – 258 ft | 40° 46 ft – 92 ft | 32'10" x 31'6" | 360° | 330700 lbs | 85%

ft	155 ft + 7 ft*			189 ft + 7 ft*			223 ft + 7 ft*			258 ft + 7 ft*			ft
	46 ft	69 ft	92 ft	46 ft	69 ft	92 ft	46 ft	69 ft	92 ft	46 ft	69 ft	92 ft	
60	31.3												60
65	30.4												65
70	29.5												70
75	28.6			28.8			28.2						75
80	27.8	18.3		28.1			27.6			26.5			80
85	27	17.7		27.4			27			26			85
90	26.4	17.1		26.8	17.3		26.5			25.2			90
95	25.8	16.6		26.2	16.8		25.9	16.5		24			95
100	25.2	16.1	10.3	25.6	16.3		25.4	16.1		22.6	15.5		100
105	24.7	15.7	10	25.1	15.9	10	25	15.7		21.3	15.1		105
110	24.2	15.2	9.7	24.7	15.5	9.7	24.6	15.3		20.1	14.8		110
115	23.7	14.8	9.4	24.3	15.1	9.4	24.1	15	9.2	18.9	14.6		115
120	23.2	14.4	9.1	23.9	14.8	9.2	23.2	14.7	9	17.8	14.3	8.7	120
125	22.8	14	8.9	23.5	14.6	9	21.6	14.4	8.8	16.7	14.1	8.5	125
130	22.4	13.7	8.6	23.1	14.3	8.8	20	14.2	8.6	15.6	13.5	8.3	130
135	22.1	13.4	8.4	22.1	14	8.6	18.5	13.9	8.5	14.7	12.7	8.2	135
140	21.8	13.2	8.3	20.6	13.8	8.4	17	13.7	8.3	13.6	11.9	8.1	140
145	21.6	12.9	8.1	18.9	13.5	8.3	15.5	13.5	8.1	12.5	11.2	7.9	145
150	21.3	12.7	7.9	17.8	13.3	8.1	14.1	13.3	8	11.5	10.4	7.8	150
155		12.5	7.7	16.6	13.1	7.9	12.7	12.6	7.9	10.4	9.7	7.7	155
160		12.3	7.6	15.5	12.9	7.8	11.4	11.6	7.7	9.2	9	7.5	160
165		12.1	7.4	14.4	12.6	7.6	10.1	10.4	7.6	8.1	8.2	7.1	165
170		11.9	7.3	13.4	12.4	7.5	8.8	9.3	7.4	7.1	7.4	6.6	170
175		11.8	7.1	12.4	11.5	7.3	8	8.4	7.3	6.3	6.7	6.1	175
180			7		10.4	7.2	7.3	7.7	7.2	5.7	6	5.7	180
185			6.8		9.2	7	6.6	7	7		5.4	5.2	185
190			6.8		8.4	7	6	6.3	6.3		4.7	4.6	190
195			6.8		7.7	6.9	5.3	5.6	5.6				195
200						6.7		5	5				200
205						6.4							205
210						5.7							210
215						5.1							215
220						4.4							220
I	92			92			92			92			I
II	92			92			92			92			II
III	92			92			92			92			III
IV	0			46			92			92			IV
V	0			46			46			92			V
% VI	0			0			46			92			VI %

* adapter / pièce d'adaptateur

TAB 118073.1/2/3/4

Lifting heights.
Hauteurs de levage.

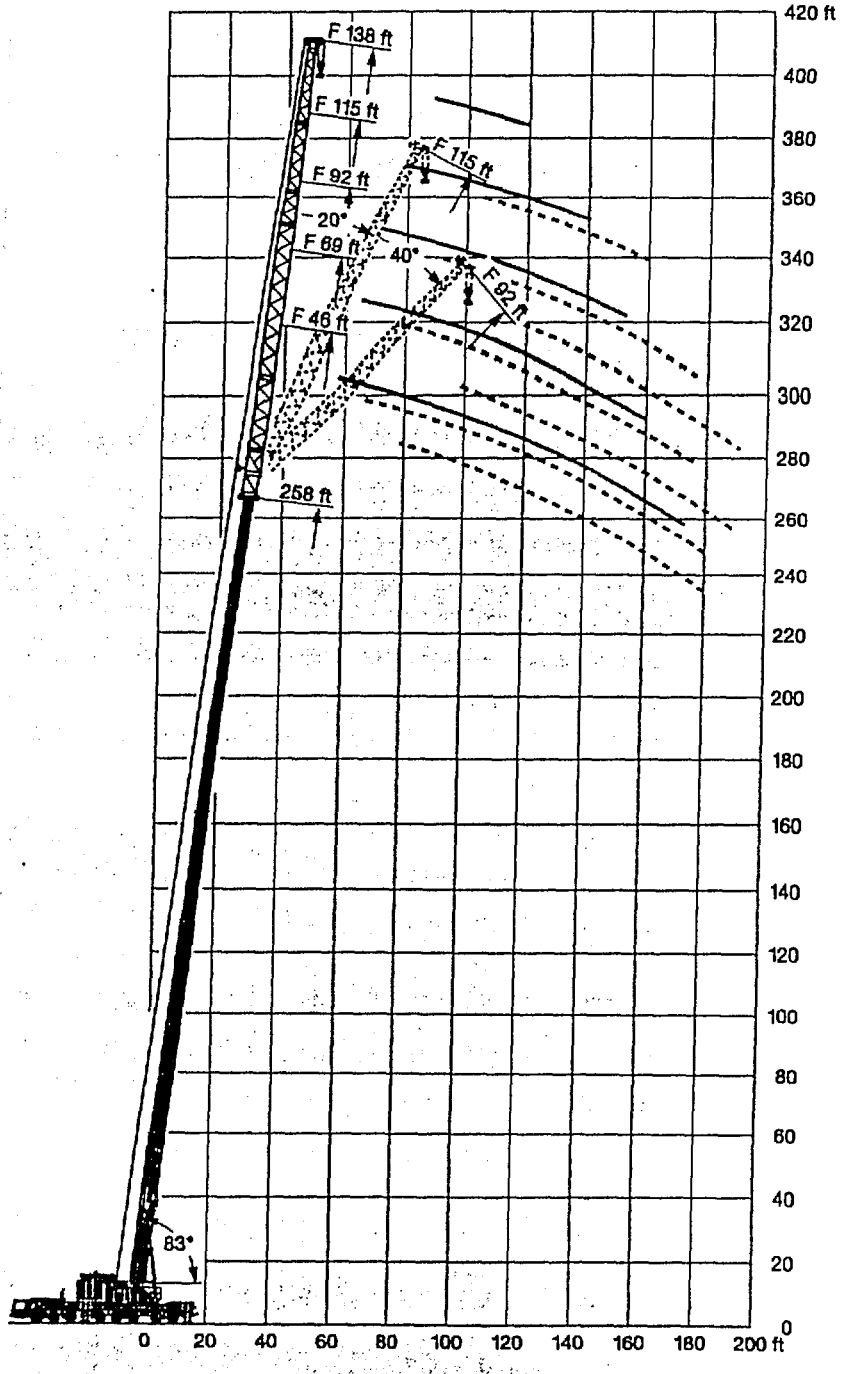

Lifting capacities on the lattice fly jib with guyed telescopic boom.
Forces de levage à la fléchette treillis fixe avec flèche télescopique haubanée.

155 ft – 258 ft | 0° 46 ft – 161 ft | 32'10" x 31'6" | 360° | 396800 lbs | 85%

ft	155 ft + 7 ft*							189 ft + 7 ft*							ft
	46 ft	69 ft	92 ft	115 ft	138 ft	161 ft	184 ft	46 ft	69 ft	92 ft	115 ft	138 ft	161 ft	184 ft	
34	135														34
36	131														36
38	128														38
40	125	82.5	62												40
45	117	77	58.2												45
50	110	72	54.5	41.3				105	69.5						50
55	104	67.5	51	38.8	28.7			101	66.5	47.3	35.5				55
60	98.5	63.5	47.8	36.3	27	21	14.9	97	63.5	45.2	34	24.5			60
65	93.5	60	45.1	33.9	25.4	19.4	14	93	60.5	43.3	32.4	23.3			65
70	89	57	42.8	32.1	23.8	17.9	13.2	89.5	58.1	41.4	31	22.1	16.6		70
75	84.5	54	40.6	30.4	22.4	16.7	12.3	86	55.7	39.5	29.5	20.9	15.7	10.8	75
80	80.5	51.2	38.5	28.8	21.3	15.7	11.3	83	53.4	37.6	28.2	19.9	14.8	10.3	80
85	76.5	48.6	36.5	27.4	20.2	14.9	10.5	80	51.2	36	26.9	19	14	9.7	85
90	72.5	46	34.6	26	19.1	14	9.7	77	49.1	34.5	25.8	18.1	13.2	9.2	90
95	69	44	32.9	24.7	18.2	13.2	8.9	74	47.1	33.1	24.7	17.3	12.5	8.7	95
100	66.5	42.3	31.3	23.5	17.3	12.5	8.2	71.5	45.2	31.8	23.7	16.6	11.9	8	100
105	63.5	40.6	30.1	22.3	16.4	11.8		69	43.4	30.5	22.7	15.9	11.3		105
110	61	38.8	29	21.1	15.5	11.1		67	41.7	29.3	21.8	15.2	10.7		110
115	58.8	37.2	27.8	20.1	14.4	10.2		63.5	40.3	28.1	20.9	14.6	10.1		115
120	56.3	35.5	26.6	19.2	13.5	9.4		59.6	39.1	27.1	20	13.9	9.6		120
125	53.3	34	25.4	18.3	12.9	8.9		55	38	26.3	19.2	13.3	9		125
130	49.1	32.5	24.3	17.5	12.3	8.4		50.7	36.8	25.5	18.3	12.5	8.5		130
135	45.1	31.5	23.2	16.7	11.7	8		46.8	35.5	24.7	17.6	11.9	7.9		135
140	41.4	30.6	22.1	16	11.2	7.5		43.1	34.3	23.8	16.9	11.5	7.4		140
145	37.9	29.8	21.1	15.2	10.7	7.1		39.6	33.1	23	16.3	11	7.1		145
150	34.7	29	20.1	14.5	10.2	6.7		36.4	32	22.1	15.7	10.5	6.7		150
155	31.7	28.3	19.4	13.8	9.7	6.3		33.4	30.9	21.3	15.1	10.1	6.4		155
160	28.9	27.6	18.8	13.2	9.2	5.9		30.6	29.8	20.6	14.5	9.7	6.1		160
165	26.1	26.9	18.1	12.5	8.8	5.6		27.9	28.7	19.8	13.9	9.3	5.8		165
170	23.5	26.2	17.5	11.9	8.3	5.2		25.3	27.4	19.1	13.4	8.9	5.5		170
175	21.1	24.2	16.9	11.5	7.9			22.9	25.1	18.4	12.9	8.5	5.2		175
180	18.2	21.9	16.3	11.1	7.5			20.5	22.8	17.7	12.4	8.1	4.9		180
185	15.1	19.7	15.8	10.7	7.1			18.2	20.6	17.1	11.9	7.7			185
190	11.9	17.5	15.5	10.3	6.8			15.9	18.4	16.7	11.4	7.4			190
195		15.4	15.1	10	6.6			13.7	16.3	16.3	10.9	7			195
200		13.2	14.8	9.6	6.4			11.7	14.1	15.5	10.5	6.8			200
205		10.9	13.9	9.3	6.1			10.1	12.1	14.1	10.2	6.6			205
210			11.9	9	5.9			8.9	10.5	11.9	9.9	6.4			210
215			10.6	8.6	5.7			7.7	9.3	10.6	9.7	6.2			215
220			9.4	8.6	5.5			6	8.2	9.5	9.4	6			220
225			8.3	8.4	5.2				7.2	8.4	9	5.8			225
230				8.2	5				6.1	7.4	8.3	5.6			230
235				7.8	4.8				5.2	6.4	7.4	5.4			235
240				7	4.7					5.5	6.4	5.2			240
245				6.1	4.6					4.6	5.6	5			245
250					4.4						4.7	4.9			250
255					4.3						3.9	4.6			255
260					4.1							3.9			260
265					3.7										265
I	92							92							I
II	92							92							II
III	92							92							III
IV	0							46							IV
V	0							46							V
% VI	0							0							VI %

* adapter / pièce d'adaptateur

TAB 118093.1/2

Lifting capacities on the lattice fly jib with guyed telescopic boom.

Forces de levage à la fléchette treillis fixe avec flèche télescopique haubanée.

LTM 1500

155 ft – 258 ft | 0° 46 ft – 161 ft | 32'10" x 31'6" | 360° | 396800 lbs | 85%

ft	223 ft + 7 ft*						258 ft + 7 ft*						ft
	46 ft	69 ft	92 ft	115 ft	138 ft	161 ft	46 ft	69 ft	92 ft	115 ft	138 ft	161 ft	
50	74	59.6											50
55	72	58.6	42.9										55
60	70.5	57.5	41.7	29.1	22		45.5	37.6					60
65	69	56	40.6	28.3	21.4		44.7	37					65
70	67	54.6	39.5	27.5	20.7	13.9	44	36.3	30.1				70
75	65.5	53	38.3	26.7	19.9	13.4	43	35.5	29.6	23.3			75
80	64	51.3	36.9	25.7	19	13	41.8	34.6	29	22.9	18.2	11.7	80
85	62.5	49.7	35.7	24.7	18.3	12.5	40.7	33.7	28.1	22.6	17.7	11.3	85
90	61	48.3	34.5	23.8	17.6	11.8	39.7	32.9	27.3	22.2	17.2	10.9	90
95	59.9	46.9	33.4	23	17	11.1	38.7	32.2	26.5	21.6	16.7	10.6	95
100	58.7	45.6	32.3	22.2	16.4	10.5	37.8	31.4	25.7	21	16.2	10.2	100
105	57.5	44.3	31.3	21.4	15.9	9.9	36.9	30.7	25	20.3	15.8	9.9	105
110	56.4	43.1	30.4	20.7	15.3	9.3	36	30.1	24.4	19.7	15.3	9.5	110
115	55.3	42	29.3	20	14.8	8.8	35.2	29.4	23.7	19.2	15	9.2	115
120	54.2	40.9	28.4	19.3	14.3	8.5	34.5	28.8	23.1	18.6	14.6	8.9	120
125	53	39.8	27.6	18.7	13.9	8.1	33.7	28	22.5	18.1	14.2	8.6	125
130	51.9	38.8	26.8	18.1	13.4	7.8	32.9	27.3	21.9	17.6	13.8	8.4	130
135	48.9	37.9	26.1	17.6	13	7.4	32.1	26.6	21.4	17.1	13.4	8	135
140	45.4	37.1	25.4	17	12.5	7.1	31.4	26	20.8	16.6	13	7.7	140
145	41.9	36.3	24.7	16.5	12.1	6.8	30.7	25.3	20.3	16.2	12.7	7.4	145
150	38.7	35.5	24	16	11.7	6.5	30	24.8	19.8	15.7	12.3	7.1	150
155	35.6	34.7	23.4	15.5	11.3	6.2	29.4	24.2	19.3	15.3	11.9	6.9	155
160	32.9	33.3	22.7	14.9	10.9	5.9	28.7	23.6	18.8	14.8	11.6	6.6	160
165	30.2	31.4	22	14.3	10.6	5.7	28.1	23.1	18.3	14.4	11.3	6.3	165
170	27.7	28.9	21.2	13.7	10.1	5.4	27.5	22.5	17.9	14	10.9	6.1	170
175	25.2	26.5	20.5	13.1	9.7	5.2	26.9	22	17.4	13.6	10.6	5.8	175
180	22.9	24.1	19.7	12.6	9.3	4.9	25.3	21.5	16.9	13.2	10.3	5.6	180
185	20.7	21.9	19.1	12.1	8.9	4.7	23.1	21	16.4	12.8	10	5.3	185
190	18.5	19.8	18.6	11.8	8.5	4.4	21	20.5	16	12.4	9.7	5.1	190
195	16.3	17.7	18.2	11.4	8.2		18.9	19.3	15.6	12	9.4	4.9	195
200	14.2	15.6	16.9	11.1	7.8		16.9	17.6	15.1	11.7	9.1	4.7	200
205	12.1	13.5	15	10.8	7.4		14.9	15.6	14.6	11.3	8.9	4.5	205
210	10.5	11.3	12.9	10.5	7.1		12.8	13.6	13.9	11	8.6	4.3	210
215	9.3	10.2	11.2	10.2	6.7		11.2	11.7	11.9	10.7	8.3	4	215
220	8.2	9.1	10	9.9	6.4		9.9	10.3	10.5	10.4	8.1		220
225	7.1	8	8.9	9.4	6		8.8	9.3	9.5	10	7.9		225
230	6.1	7	7.9	8.5	5.7		7.8	8.3	8.4	9.2	7.6		230
235	5.1	6	6.9	7.6	5.3		6.9	7.3	7.5	8.3	7.4		235
240	4.2	5.1	6	6.6	5		5.9	6.4	6.6	7.4	7		240
245		4.2	5.1	5.7	4.6		5	5.5	5.7	6.5	6.5		245
250				4.9	4.3			4.6	4.9	5.6	5.6		250
255				4.1	3.9			3.8	4.1	4.8	4.8		255
260										4.1	4		260
I	92						92						I
II	92						92						II
III	92						92						III
IV	92						92						IV
V	46						92						V
% VI	46						92						VI %

* adapter / pièce d'adaptateur

TAB 118093.3/4

155 ft – 258 ft | 20° 46 ft – 115 ft | 32'10" x 31'6" | 360° | 396800 lbs | 85%

ft	155 ft + 7 ft*				189 ft + 7 ft*				223 ft + 7 ft*				258 ft + 7 ft*				ft
	46 ft	69 ft	92 ft	115 ft	46 ft	69 ft	92 ft	115 ft	46 ft	69 ft	92 ft	115 ft	46 ft	69 ft	92 ft	115 ft	
50	55.2																50
55	53.4				52.4												55
60	51.6	32.9			51				50.7								60
65	50	31.7			49.7				49.7								65
70	48.7	30.6			48.5	30.3			48.6								70
75	47.4	29.6	21		47.4	29.4			47.7	29			42.2				75
80	46.3	28.6	20		46.3	28.5	20.2		46.8	28.2			41.3				80
85	45.2	27.8	19.2		45.3	27.7	19.4		45.9	27.5			40.2				85
90	44.2	27	18.3	12.8	44.5	27	18.6		45.1	26.9	17.7		39.1	27.9			90
95	43.2	26.3	17.6	12.2	43.6	26.4	17.9	11.8	44.4	26.3	17		38.2	27.4			95
100	42.3	25.7	17.1	11.5	42.8	25.8	17.2	11.3	43.7	25.7	16.5	10.4	37.2	26.9	17.4		100
105	41.4	25	16.6	10.9	42.1	25.2	16.8	10.7	43	25.2	16.1	9.9	36.3	26.4	17		105
110	40.6	24.4	16.1	10.6	41.4	24.7	16.3	10.2	42.4	24.8	15.7	9.6	35.5	26	16.6		110
115	39.8	23.9	15.7	10.3	40.7	24.2	15.9	9.7	41.8	24.3	15.4	9.3	34.7	25.5	16.3	9.7	115
120	39.1	23.3	15.2	10	40	23.7	15.5	9.3	41.2	23.9	15	9	33.9	25.1	16	9.5	120
125	38.6	22.7	14.8	9.7	39.4	23.2	15.1	9.1	40.6	23.4	14.7	8.8	33.1	24.7	15.6	9.3	125
130	38.1	22.2	14.4	9.5	38.8	22.8	14.8	8.9	40.1	23.1	14.4	8.5	32.4	24.4	15.3	9.1	130
135	37.6	21.9	14	9.2	38.2	22.3	14.4	8.6	39.5	22.7	14.1	8.3	31.7	24	15	8.9	135
140	37.2	21.5	13.6	9	37.7	21.9	14.1	8.4	39	22.3	13.8	8	31	23.6	14.8	8.7	140
145	36.7	21.2	13.3	8.7	37.4	21.5	13.8	8.2	38.5	21.9	13.6	7.8	30.3	23.3	14.5	8.5	145
150	36.3	20.9	12.9	8.5	37.1	21.2	13.5	8.1	38.2	21.6	13.3	7.7	29.7	23	14.3	8.4	150
155	34.4	20.6	12.7	8.3	36	21	13.1	7.9	37.9	21.3	13.1	7.5	29.1	22.7	14	8.2	155
160	31.8	20.3	12.5	8.1	33.9	20.7	12.9	7.7	36.3	21	12.8	7.4	28.5	22.3	13.8	8.1	160
165	28.8	20	12.3	7.8	31	20.5	12.7	7.5	33.5	20.8	12.6	7.3	27.9	21.9	13.6	8	165
170	26	19.8	12.1	7.6	28.3	20.3	12.5	7.4	30.8	20.5	12.4	7.1	27.4	21.4	13.4	7.9	170
175	23.4	19.5	11.9	7.5	25.7	20.1	12.4	7.2	28.3	20.3	12.3	7	26.8	21	13.2	7.8	175
180	20.8	19.4	11.7	7.4	23.2	19.8	12.2	7.1	25.9	20.1	12.1	6.9	26.2	20.5	13	7.7	180
185		19.4	11.6	7.3	20.8	19.6	12	6.9	23.5	19.9	11.9	6.8	25.4	20	12.8	7.5	185
190		19.4	11.4	7.2	18.5	19.4	11.9	6.8	21.3	19.7	11.7	6.7	23.8	19.6	12.6	7.4	190
195		18.1	11.2	7.1	16.2	19.2	11.7	6.7	19.1	19.5	11.6	6.6	21.7	19.1	12.5	7.3	195
200		16.2	11.1	6.9	13.9	17.9	11.6	6.6	16.9	18.9	11.4	6.5	19.6	18.7	12.3	7.2	200
205		13.9	10.9	6.8	11.7	15.8	11.4	6.5	14.8	17.6	11.2	6.3	17.6	18.3	12.1	7.1	205
210			10.8	6.7	10.1	13.7	11.3	6.4	12.6	15.6	11	6.2	15.7	17.8	12	7	210
215			10.8	6.6	8.8	11.7	11.1	6.3	10.9	13.5	10.9	6.1	13.6	15.8	11.8	6.9	215
220			10.8	6.5		10.2	11	6.2	9.6	11.7	10.7	6	11.8	13.9	11.6	6.8	220
225			10.3	6.4		8.9	10.7	6.1	8.4	10.2	10.6	5.9	10.3	12	11.4	6.7	225
230				6.3		7.8	10	6	7.2	9.1	10.4	5.9	9.2	10.5	11.2	6.6	230
235				6.3		6.6	8.9	6	5.2	8	9.6	5.8	8.2	9.5	10.4	6.5	235
240				6.2			7.8	5.9		6.9	8.7	5.7	7.2	8.4	9.5	6.4	240
245				6.2			6.7	5.8		5.9	7.7	5.6	6.1	7.5	8.5	6.3	245
250				6.2			5.6	5.7		5	6.7	5.5		6.5	7.5	6.2	250
255				6			4.6	5.6		4	5.7	5.4		5.6	6.6	6.1	255
260								5.3			4.8	5.4		4.7	5.7	6	260
265								4.7			3.9	5.1			4.9	5.9	265
270												4.5				5.5	270
275												3.7				4.7	275
280																3.9	280
I	92				92				92				92				I
II	92				92				92				92				II
III	92				92				92				92				III
IV	0				46				92				92				IV
V	0				46				46				92				V
% VI	0				0				46				92				VI %

* adapter / pièce d'adaptateur

TAB 118101.1/2/3/4

Lifting capacities on the lattice fly jib with guyed telescopic boom.
Forces de levage à la fléchette treillis fixe avec flèche télescopique haubanée.

155 ft – 258 ft | 40° 46 ft – 92 ft | 32'10" x 31'6" | 360° | 396800 lbs | 85%

ft	155 ft + 7 ft*			189 ft + 7 ft*			223 ft + 7 ft*			258 ft + 7 ft*			ft
	46 ft	69 ft	92 ft	46 ft	69 ft	92 ft	46 ft	69 ft	92 ft	46 ft	69 ft	92 ft	
60	34.5												60
65	34												65
70	33.6			33.3									70
75	33.2			33			32.1						75
80	32.9	17.9		32.7			31.9						80
85	32.5	17.6		32.5			31.7						85
90	32.4	17.4		32.2	16.7		31.5			32.5			90
95	32.2	17.2		32	16.5		31.3	16.7		32.3			95
100	32.1	17	10.4	31.9	16.4		31.1	16.4		32.2			100
105	32	16.9	10.1	31.8	16.2	10	31	16.2		32	17.8		105
110	31.9	16.8	9.8	31.8	16.1	9.7	31	16		32	17.7		110
115	31.8	16.6	9.6	31.8	16	9.5	31	15.8	9.3	32	17.6		115
120	31.6	16.5	9.4	31.7	15.9	9.3	31	15.6	9.1	32	17.5		120
125	31.5	16.4	9.3	31.7	15.9	9.2	31	15.6	8.9	32	17.5	9.2	125
130	31.4	16.3	9.3	31.7	15.8	9.1	31	15.5	8.7	31.9	17.4	9.1	130
135	31.4	16.1	9.2	31.7	15.7	9.1	31	15.4	8.6	31.5	17.3	9	135
140	31.4	16.1	9.2	31.6	15.7	9	31	15.4	8.6	30.9	17.3	9	140
145	31.4	16.1	9.1	31.6	15.6	9	31	15.3	8.5	30.3	17.2	8.9	145
150	31.4	16.1	9.1	31.6	15.6	8.9	31	15.2	8.5	29.7	17.2	8.9	150
155		16.1	9	31.6	15.5	8.9	31	15.2	8.4	29.1	17.1	8.8	155
160		16.1	9	31.6	15.5	8.8	31	15.2	8.4	28.5	17.1	8.8	160
165		16.1	8.9	31.3	15.4	8.8	31	15.2	8.4	27.9	17	8.8	165
170		16.1	8.9	30	15.4	8.7	31	15.2	8.3	27.4	17	8.7	170
175		16.1	8.8	27.5	15.4	8.7	29.8	15.2	8.3	26.8	17	8.7	175
180			8.8		15.4	8.7	27.8	15.2	8.3	26.3	17	8.7	180
185			8.8		15.4	8.7	25.3	15.2	8.3	25.8	17	8.7	185
190			8.8		15.4	8.7	22.9	15.2	8.3	25.4	17	8.7	190
195			8.8		15.4	8.7	20.7	15.2	8.3	23.4	17	8.7	195
200						8.7		15.2	8.3	21.4	17	8.7	200
205						8.7		15.2	8.3	19.3	17	8.7	205
210						8.7		15.2	8.3	17.2	17	8.6	210
215						8.7		15.2	8.3	15.2	17	8.6	215
220						8.7		13.8	8.3	13.1	16.1	8.6	220
225									8.3		14.5	8.6	225
230									8.3		12.5	8.6	230
235									8.3		11	8.6	235
240									8.3		9.7	8.6	240
245												8.6	245
250												8.6	250
255												8.2	255
260												7.4	260
265												6.4	265
I	92			92			92			92			I
II	92			92			92			92			II
III	92			92			92			92			III
IV	0			46			92			92			IV
V	0			46			46			92			V
% VI	0			0			46			92			VI %

* adapter / pièce d'adaptateur

TAB 116109.1/2/3/4

Lifting heights.
Hauteurs de levage.

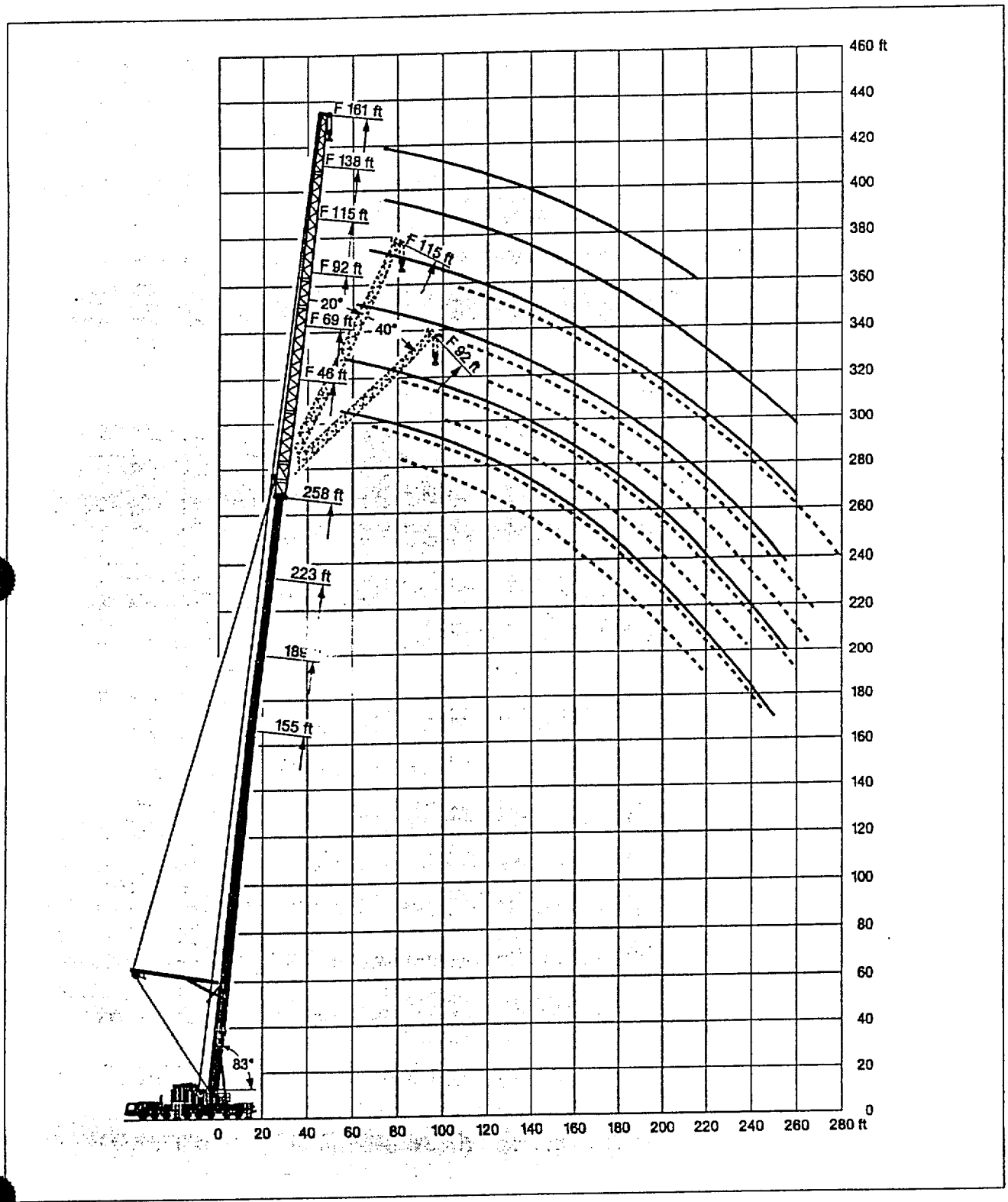

Lifting capacities on the luffing lattice jib.
Forces de levage à la fléchette treillis relevable.

LTM 1500

83°
53 ft – 258 ft

69 ft – 299 ft

32'10" x 31'6"

360°

330700 lbs

85%

ft	53 ft + 13 ft*											87 ft + 13 ft*											ft
	69ft	92ft	115ft	138ft	161ft	184ft	207ft	230ft	253ft	276ft	299ft	69ft	92ft	115ft	138ft	161ft	184ft	207ft	230ft	253ft	276ft	299ft	
50	133																						50
55	124	120										145											55
60	119	112	108	104								140											60
65	114	105	102	98								138											65
70	114	103	96	92	86.5							133	115										70
75	114	102	91	87	82	73						125	112	105	97.5	85							75
80		102	86.5	83	78	70.5	59.9						109	99.5	94	82.5	68.5						80
85		102	84.5	79.5	74.5	68	58						107	94.5	90	80	67						85
90		102	83.5	76	71	65.5	56.2	45.4					102	93	86.5	78	65.5	53.9					90
95		100	83	73	68	63	54.6	44.3	35.5				96	92	83.5	75.5	64.5	53.1	41.7				95
100			82	71.5	65.5	60.5	53	43.3	34.8	26.8			91	89	81	73.5	63	52.3	41.1	32.5			100
105			81	71	62.5	58.3	51.4	42.4	34	26.3	19.6			84.5	79.5	71	61.5	51.6	40.5	31.9	24.4		105
110			80.5	71	61	56.2	49.8	41.6	33.3	25.7	19.2			80.5	78	69	60.5	50.8	39.9	31.5	24		110
115			79.5	70.5	59.6	54.1	48.3	40.8	32.6	25.2	18.7			76.5	75	67.5	58.9	49.8	39.3	31	23.6	17.7	115
120			74.5	70.5	58.6	52.4	46.8	39.6	32	24.7	18.3			73	71.5	66.5	57.6	48.7	38.8	30.5	23.2	17.3	120
125				70	57.6	51.2	45.4	38.6	31.3	24.2	17.9				68	66	56.4	47.7	38.2	30.1	22.9	17	125
130				69	56.6	50.6	44.1	37.7	30.6	23.7	17.5				65	63.5	55.2	46.7	37.7	29.7	22.5	16.7	130
135				66.5	55.7	49.9	43.1	36.9	30	23.2	17.1				62	60.5	54.2	45.7	37.1	29.3	22.2	16.3	135
140				62	54.9	49.3	42.5	36	29.3	22.7	16.8				59.4	57.9	53.4	44.8	36.6	28.9	21.8	16	140
145					54	48.8	42.1	35.2	28.7	22.3	16.4				56.9	55.4	53	44	36.1	28.5	21.5	15.7	145
150					53	48.2	41.6	34.4	28.2	21.8	16.1				54.6	53.3	51.7	43.6	35.7	28.2	21.2	15.4	150
155					52	47.7	41.5	33.8	27.6	21.4	15.7					51.2	49.7	43.5	35.2	27.8	20.9	15.1	155
160					51.4	47.1	41.2	33.4	27	20.9	15.4					49.1	47.6	43.5	34.8	27.5	20.6	14.9	160
165					49.5	46.7	40.9	33.1	26.5	20.5	15.1					47.2	45.7	43.3	34.6	27.1	20.3	14.6	165
170					40.7	46.7	40.6	32.8	26.1	20.1	14.8					45.4	43.9	42.4	34.5	26.8	20	14.3	170
175						45.5	40.4	32.5	25.8	19.7	14.5						42.2	40.9	34.4	26.5	19.7	14.1	175
180						43.9	40.1	32.2	25.5	19.4	14.2						40.5	39.2	34.3	26.3	19.4	13.9	180
185						41.2	39.6	31.9	25.3	19	13.9						39	37.7	34.2	26.2	19.2	13.7	185
190						36.1	39.6	31.7	25	18.8	13.6						37.8	36.3	33.8	25.8	19.2	13.7	190
195							38.2	31.4	24.8	18.8	13.4						36.2	34.9	33.1	25.4	18.9	13.6	195
200							36.9	31.2	24.6	18.8	13.3							33.6	32	25.1	18.6	13.4	200
205							34.6	30.9	24.3	18.8	13.2							32.4	30.8	24.8	18.3	13.1	205
210							30.2	30.7	24.1	18.6	13.1							31.2	29.6	24.4	18	12.9	210
215							25.9	30.5	23.9	18.8	12.8							30.2	28.5	24.1	17.8	12.7	215
220								30	23.7	18.7	12.6								27.6	23.8	17.5	12.5	220
225								29.3	23.5	18.6	12.3								26.7	23.5	17.2	12.2	225
230								28.2	23.3	18.3	12.1								25.7	23.2	17	12	230
235								25.1	23	18.1	11.9								24.8	22.9	16.8	11.8	235
240									22.6	17.8	11.7								23.9	22.1	16.5	11.6	240
245									22.4	17.5	11.4									21.2	16.3	11.5	245
250									22	17.3	11.2									20.4	16.1	11.3	250
255									20.2	17	11									19.6	15.8	11.1	255
260									16.7	16.8	10.8									18.8	15.6	10.9	260
265										16.6	10.6										15.4	10.7	265
270										16.3	10.4										15.2	10.6	270
275										15.9	10.2										14.9	10.4	275
280										13.6	10										14.3	10.2	280
285											9.8										13.6	10	285
290											9.5											9.8	290
295											9.3											9.6	295
300											9.3											9.4	300
305											8.7											9.3	305

%	53 ft + 13 ft*	87 ft + 13 ft*	%
I	0	46	I
II	0	46	II
III	0	0	III
IV	0	0	IV
V	0	0	V
VI	0	0	VI

* adapter / pièce d'adaptateur

TAB 118129.1/2/3/4

83°
53 ft – 258 ft

69 ft – 299 ft

32'10" x 31'6"

360°

330700 lbs

85%

ft	121 ft + 13 ft*											155 ft + 13 ft*											ft
	69ft	92ft	115ft	138ft	161ft	184ft	207ft	230ft	253ft	276ft	299ft	69ft	92ft	115ft	138ft	161ft	184ft	207ft	230ft	253ft	276ft	299ft	
60	131																						60
65	123																						65
70	117											83.5											70
75	112	105										79.5	73.5										75
80	107	99.5	93.5	83.5								76	70										80
85	102	95.5	90	81.5								73	67										85
90		91.5	86.5	79	69	57.5						70	64	60.5	54.9								90
95		88	83.5	76.5	67	56.4	46.2						61.5	57.9	53	46.8	39.8						95
100		84.5	81.5	74	65.5	55.2	45.6	[illegible]					58.8	55.7	51.1	45.6	39	32.5					100
105			79	71.5	64	54	45	[illegible]	27.6				56.4	54	49.4	44.2	38.2	31.8	26				105
110			75.5	69.5	62.5	52.9	44.5	[illegible]	27.4				54.1	52.4	47.7	42.8	37.3	31.1	25.5				110
115			72	67.5	61	51.8	43.8	34.7	27.2	20.6				50.9	46.3	41.6	36.2	30.5	25	20.1			115
120			68.5	66	59.5	50.8	43	34.3	26.9	20.4	15			49.4	45	40.3	35.2	29.8	24.6	19.7	15		120
125			65	63.5	58.2	49.8	42.2	34	26.6	20.2	14.7			48.1	43.8	39.1	34.2	29.1	24.1	19.3	14.7	10.6	125
130			62	60.5	57.1	48.9	41.5	33.5	26.4	20	14.5			46.8	42.6	38.1	33.3	28.3	23.7	18.9	14.3	10.5	130
135				58	55.8	48	40.8	33	26.1	19.7	14.3			45.5	41.6	37.2	32.4	27.5	23.2	18.5	14	10.3	135
140				55.6	54.1	47.2	40.1	32.5	25.7	19.5	14.1				40.5	36.3	31.5	26.8	22.6	18.1	13.6	10.1	140
145				53.4	51.9	46.4	39.4	32	25.4	19.2	13.9				39.5	35.5	30.7	26.1	22	17.6	13.3	9.9	145
150				51.2	49.7	45.7	38.8	31.6	25.1	19	13.7				38.5	34.8	29.8	25.4	21.5	17.1	13	9.6	150
155					47.6	45	38.3	31.1	24.8	18.7	13.4				37.6	34	29	24.7	20.9	16.7	12.6	9.4	155
160					45.7	43.6	37.9	30.7	24.4	18.5	13.2					33.3	28.3	24.1	20.4	16.2	12.3	9.1	160
165					43.8	41.8	37.4	30.3	24.1	18.2	13					32.6	27.5	23.6	19.9	15.8	11.9	8.9	165
170					42.1	40.1	37	29.9	23.7	18	12.8					31.9	26.8	23.1	19.4	15.3	11.6	8.7	170
175					40.5	38.5	36.6	29.6	23.4	17.8	12.6					31.3	26.1	22.6	18.9	14.9	11.3	8.4	175
180						36.9	35.7	29.3	23.1	17.6	12.4					30.6	25.4	22.1	18.3	14.5	11	8.2	180
185						35.5	34.6	29	22.9	17.4	12.2						24.8	21.7	17.7	14.1	10.6	8	185
190						34.1	[illegible]	28.7	22.7	17.2	12.1						24.2	21.3	17.2	13.8	10.4	7.8	190
195						32.9	[illegible]	[illegible]	22.6	16.9	11.9						23.6	20.8	16.7	13.5	10.1	7.6	195
200							[illegible]	[illegible]	22.5	16.7	11.7						23	20.4	16.2	13.2	9.8	7.5	200
205							25.5	27.3	22.4	16.6	11.6							20.1	15.7	13	9.5	7.3	205
210							28.4	26.6	22.2	16.5	11.5							19.7	15.2	12.7	9.3	7.2	210
215							27.6	25.5	22	16.3	11.5							19.3	14.7	12.5	9.1	7	215
220							26.7	24.5	21.7	16.2	11.4							18.9	14.2	12.3	8.9	6.9	220
225								23.5	21.5	16.1	11.3							18.6	13.8	12	8.7	6.8	225
230								22.5	21.2	16	11.1								13.4	11.8	8.5	6.6	230
235								21.7	20.3	15.9	11								12.9	11.6	8.3	6.5	235
240								20.8	19.4	15.8	10.8								12.5	11.4	8.1	6.4	240
245									18.5	15.6	10.7								12.1	11.2	7.9	6.3	245
250									17.7	15.4	10.6									11	7.8	6.1	250
255									16.9	14.5	10.4									10.8	7.6	6	255
260									16.1	13.7	10.3									10.6	7.4	5.9	260
265									15.4	12.9	10.2									10.4	7.2	5.8	265
270										12.2	10.1									10.2	7.1	5.7	270
275										11.4	9.9									10	6.9	5.6	275
280										11	9.6										6.8	5.5	280
285										10.6	9.2										6.6	5.4	285
290											8.8										6.4	5.3	290
295											8.4										6.3	5.2	295
300											8											5.1	300
305											7.7											5	305
310											7.4											4.9	310
315																						4.8	315
320																						4.6	320
I	92											92											I
II	46											92											II
III	46											92											III
IV	0											0											IV
V	0											0											V
% VI	0											0											VI %

* adapter / pièce d'adaptateur

TAB 118129.5/6/7/8

Lifting capacities on the luffing lattice jib.
Forces de levage à la fléchette treillis relevable.

LTM 1500

83°
53 ft – 258 ft

69 ft – 276 ft

32'10" x 31'6"

360°

330700 lbs

85%

ft	189 ft + 13 ft*										223 ft + 13 ft*								258 ft + 13 ft*					ft
	69ft	92ft	115ft	138ft	161ft	184ft	207ft	230ft	253ft	276ft	69ft	92ft	115ft	138ft	161ft	184ft	207ft	230ft	69ft	92ft	115ft	138ft	161ft	
75	58.6																							75
80	55.5	51.2									38.9								23.2					80
85	52.5	48.8									37								22.1					85
90	49.8	46.5	43								35.1	31.1							21					90
95		44.4	41.4	36.8							33.2	29.7	26.5						19.9	15.7				95
100		42.6	39.6	35.6	30.6	25.8						28.2	25.4	21.5						14.7	11.9	9.4		100
105		41.2	38	34.5	29.7	25.1	20.4					26.8	24.3	20.6	16.8	12.8				13.8	11.2	8.9	6.6	105
110		39.9	36.4	33.2	28.9	24.5	19.8					25.3	23.1	19.7	16.2	12.2				12.8	10.7	8.5	6.2	110
115		38.6	35	32	28	23.7	19.3	15.3				23.9	22.1	18.8	15.4	11.5	8.6			11.9	10.1	8.1	5.9	115
120			33.6	30.7	27	22.8	18.7	15	10.6				21	18	14.7	10.9	8.2	5.8		11	9.6	7.7	5.6	120
125			32.3	29.5	26	22	17.9	14.5	10.5	6.6			20	17.2	13.9	10.4	7.9	5.6			9.1	7.3	5.3	125
130			31	28.5	25.1	21.2	17.1	14	10.2	6.6			19	16.5	13.2	9.9	7.5	5.3			8.6	6.9	4.9	130
135			29.9	27.6	24.1	20.4	16.4	13.5	9.9	6.6			18	15.7	12.4	9.5	7.2	5.1			8	6.5	4.6	135
140				26.8	23.2	19.7	15.7	13	9.7	6.6			17.1	14.9	11.7	9	6.8	4.9			7.6	6.2	4.3	140
145				25.9	22.3	19	15	12.5	9.4	6.6				14.1	11.1	8.6	6.5	4.6				5.8	4	145
150				25.2	21.5	18.3	14.3	12	9.1	6.3				13.4	10.5	8.2	6.1	4.4				5.4	3.7	150
155				24.4	20.7	17.6	13.7	11.5	8.8	6.1				12.7	10.1	7.8	5.7	4.2				5.1	3.4	155
160				23.7	19.9	16.9	13.1	11	8.5	5.9				12.1	9.7	7.5	5.4	3.9				4.8	3.1	160
165					19.2	16.3	12.5	10.6	8.2	5.7					9.3	7.1	5	3.5				4.4	2.8	165
170					18.5	15.8	11.9	10.2	7.8	5.5					9	6.8	4.7	3.2				4.1	2.5	170
175					17.8	15.3	11.5	9.7	7.5	5.2					8.7	6.6	4.4	3					2.2	175
180					17.1	14.7	11.1	9.3	7.1	5					8.3	6.4	4.1	2.7						180
185						14.2	10.8	8.9	6.8	4.7					8	6.1	3.8	2.4						185
190						13.7	10.6	8.5	6.5	4.5					7.7	5.9	3.7	2.1						190
195						13.3	10.3	8.3	6.1	4.2						5.7	3.5							195
200						12.8	10	8	5.8	3.9						5.5	3.3							200
205						12.3	9.8	7.8	5.6	3.6						5.3	3.2							205
210							9.5	7.5	5.3	3.4							3							210
215							9.2	7.3	5.1	3.1							2.8							215
220							9	7.1	4.9	2.9							2.7							220
225							8.8	6.9	4.7	2.7							2.5							225
230								6.7	4.4	2.6							2.4							230
235								6.5	4.3	2.4							2.3							235
240								6.3	4.1	2.2														240
245								6.1	3.9															245
250								5.9	3.7															250
255								5.7	3.5															255
260									3.3															260
265									3.2															265
270									3															270
275									2.8															275
I	92										92								92					I
II	92										92								92					II
III	92										92								92					III
IV	46										92								92					IV
V	46										46								92					V
% VI	0										46								92					VI %

* adapter / pièce d'adaptateur

TAB 118129.9/10

Lifting heights.
Hauteurs de levage.

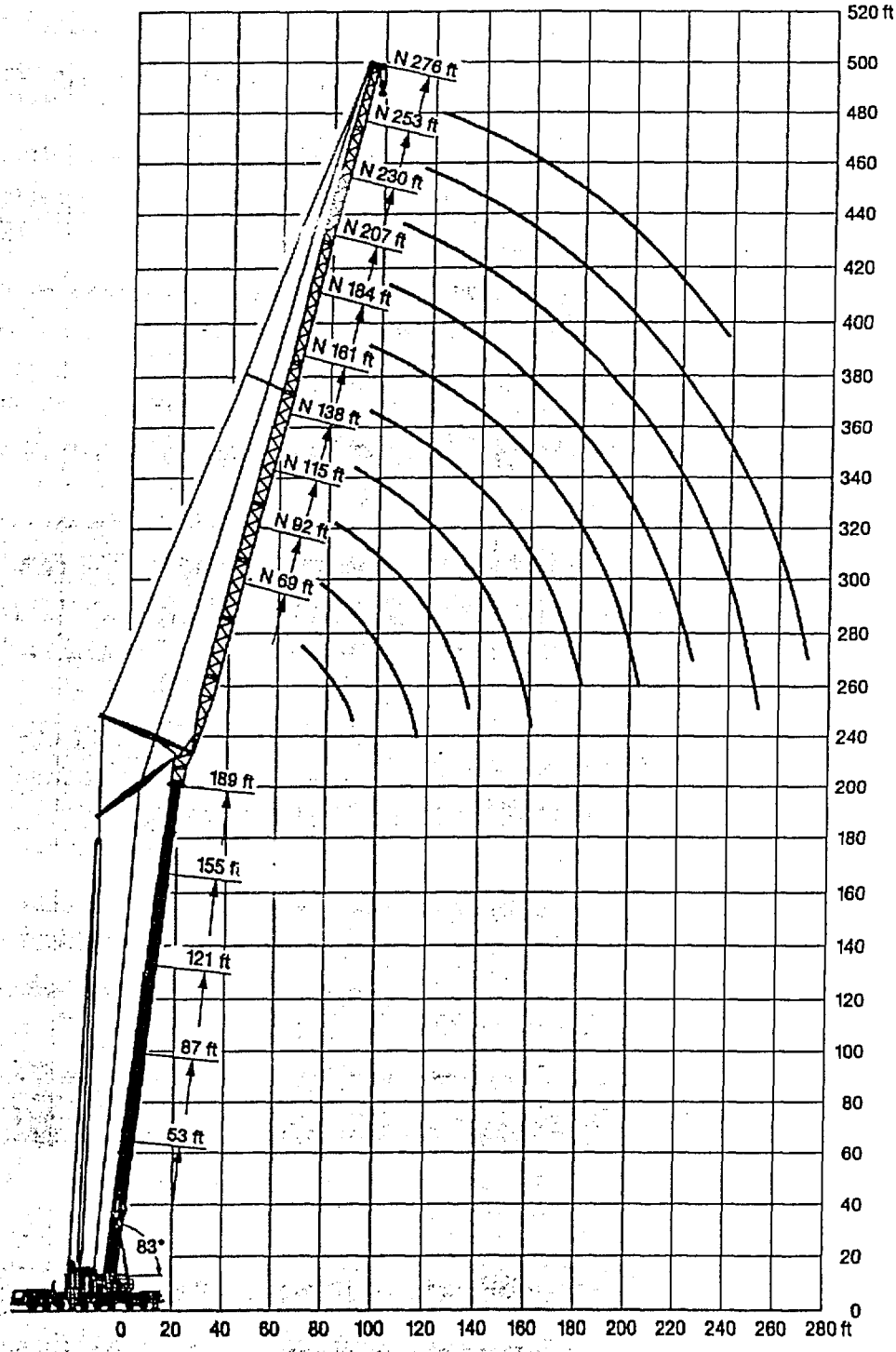

Telescopic boom / Flèche télescopique: 83°.

Lifting capacities on the luffing lattice jib.
Forces de levage à la fléchette treillis relevable.

LTM 1500

75°
53 ft – 258 ft

69 ft – 299 ft

32'10" x 31'6"

360°

330700 lbs

85%

ft	53 ft + 13 ft*											87 ft + 13 ft*											ft
	69ft	92ft	115ft	138ft	161ft	184ft	207ft	230ft	253ft	276ft	299ft	69ft	92ft	115ft	138ft	161ft	184ft	207ft	230ft	253ft	276ft	299ft	
55	125																						55
60	116																						60
65	107																						65
70	105	99.5										124											70
75	103	93.5	91.5									116											75
80	102	88.5	86									111	106										80
85	101	84	81									109	101										85
90		82.5	77.5	74.5								104	96	93									90
95		82	74	71									92.5	88.5									95
100		82	71	67.5	65								90	84	81								100
105		81.5	70.5	65	62	58.1							87	81	77	72							105
110		81.5	70.5	63	58.9	55.6							83	78	74	69.5							110
115			70.5	60.5	56.6	53.3							79	75.5	71.5	67							115
120			70.5	59.2	54.6	51	46.6							73.5	69	64.5	57.7						120
125			70.5	58.8	52.6	48.8	44.9	38.9						70	67	62.5	56	48.1					125
130			70.5	58.8	50.8	47	43.3	37.7						67	65	60.5	54.4	46.9					130
135				58.8	49.9	45.5	41.8	36.6						64	62.5	58.5	52.8	45.8					135
140				58.8	49.6	44.1	40.3	35.5	29.3						59.7	56.8	51.4	44.7	36.9				140
145				58.8	49.6	42.7	39.1	34.5	28.5	22.4					57.3	55.4	50.1	43.6	36.3	28			145
150				58.8	49.6	41.4	37.8	33.5	27.8	21.8					55.1	53.5	48.8	42.6	35.6	28.5			150
155				54.3	49.6	40.8	36.7	32.6	27.1	21.3					53	51.4	47.6	41.7	35	28.1			155
160					49.6	40.5	35.5	31.7	26.4	20.8	15.5				50.9	49.3	46.6	40.8	34.4	27.7	20.8		160
165					49.6	40.5	34.5	30.9	25.7	20.3	15.1					47.4	45.5	40	33.8	27.3	20.5	15	165
170					49.6	40.5	34	30.1	25.1	19.8	14.7					45.6	43.9	39.2	33.1	26.9	20.1	14.7	170
175					49.3	40.5	34	29.4	24.5	19.4	14.4					43.9	42.2	38.4	32.5	26.5	19.8	14.4	175
180						40.5	34	28.7	23.9	18.9	14.1					42.2	40.6	38	31.9	26	19.5	14.2	180
185						40.5	34	28	23.3	18.5	13.7						39.1	37.6	31.3	25.5	19.2	13.9	185
190						40.5	34	27.7	22.8	18.1	13.4						37.8	36.1	30.7	25.1	18.9	13.6	190
195						40.5	34	27.7	22.3	17.7	13.1						36.2	34.8	30.2	24.6	18.6	13.4	195
200						40	34	27.7	21.9	17.4	12.8						34.9	33.5	30	24.2	18.4	13.2	200
205							34	27.7	21.7	17	12.5						33.7	32.2	29.9	23.7	18.1	12.9	205
210							34	27.7	21.7	16.6	12.2							31.1	29.4	23.3	17.9	12.7	210
215							34	27.7	21.7	16.3	11.9							30	28.3	23.3	17.6	12.5	215
220							33.7	27.7	21.7	16.1	11.6							28.9	27.4	23.3	17.4	12.3	220
225								27.7	21.7	16	11.3							28	26.5	23.3	17.2	12.1	225
230								27.7	21.7	16	11								25.5	23.3	16.9	11.9	230
235								27.7	21.7	16	10.9								24.6	22.6	16.9	11.6	235
240								27.7	21.7	16	10.8								23.6	21.8	16.8	11.4	240
245								27.4	21.7	16	10.8								22.8	20.9	16.7	11.1	245
250									21.7	16	10.8								21.9	20	16.6	11	250
255									21.7	16	10.8								21.1	19.2	16.5	10.8	255
260									21.7	16	10.8									18.4	16.4	10.7	260
265									21.4	16	10.8									17.7	16	10.5	265
270										16	10.7									17	15.3	10.4	270
275										16	10.5									16.3	14.5	10.3	275
280										15.9	10.4										13.8	10.2	280
285										15.8	10.2										13.1	10	285
290										15.6	10.1										12.4	9.9	290
295										15.5	9.9										11.7	9.8	295
300											9.8										11.3	9.6	300
305											9.7											9.4	305
310											9.5											9.1	310
315																						8.8	315
320																						8.4	320
I	0											46											I
II	0											46											II
III	0											0											III
IV	0											0											IV
V	0											0											V
% VI	0											0											VI %

* adapter / pièce d'adaptateur

TAB 118136.1/2

75°
53 ft – 258 ft

69 ft – 299 ft

32'10" x 31'6"

360°

330700 lbs

ft	121 ft + 13 ft*											155 ft + 13 ft*										ft
	69ft	92ft	115ft	138ft	161ft	184ft	207ft	230ft	253ft	276ft	299ft	69ft	92ft	115ft	138ft	161ft	184ft	207ft	230ft	253ft	276ft	
80	96.5																					80
85	91																					85
90	86.5	83.5																				90
95	83	79.5										54.6										95
100	80.5	75.5	74									51.9	49									100
105		72	70.5									49.6	46.5									105
110		69.5	67.5									47.6	44.3									110
115		67.5	64.5	62									42.3	40.6								115
120		65	62	59.5	55.7								40.5	38.7	36.5							120
125			59.3	57.1	53.8								39.1	37	34.8							125
130			57.9	54.9	51.9								38	35.4	33.2							130
135			56.2	52.7	50.1	45.5							37	34	31.8	29.6						135
140			54.3	51	48.3	44.3	38.3							32.8	30.4	28.2	25.5					140
145			52.2	49.6	46.6	43.1	37.4							31.6	29.1	26.8	24.3					145
150			50	48.3	44.9	41.9	36.5							30.8	27.9	25.6	23.1					150
155				46.5	43.3	40.6	35.6	30						29.9	27	24.5	22.1	19.4				155
160				44.6	42.1	39.3	34.8	29.4	23.9						26.2	23.4	21	18.3				160
165				42.8	41	38	33.9	28.8	23.5						25.7	22.4	20	17.3	15.3			165
170				41.2	39.5	36.7	33	28.3	23						25.1	21.5	19.1	16.4	14.3			170
175					38	35.6	32.1	27.7	22.6	17.4					24.6	20.9	18.2	15.5	13.5	11		175
180					36.5	34.3	31.2	27.1	22.1	17.1	12.7				24.1	20.3	17.4	14.6	12.6	10.4		180
185					35.1	32.9	30.4	26.5	21.7	16.7	12.4					19.7	16.5	13.8	11.8	9.9	7.9	185
190					33.8	31.6	29.5	25.9	21.3	16.4	12.1					19.1	15.9	13	10.9	9.3	7.4	190
195					32.6	30.3	28.7	25.4	20.9	16.1	11.8					18.5	15.4	12.2	10.5	8.8	7	195
200						29.1	28.1	24.8	20.4	15.8	11.6					17.9	15	11.4	10	8.3	6.6	200
205						28.1	27.3	24.3	20	15.5	11.3						14.6	10.8	9.5	7.7	6.1	205
210						27.3	26.2	23.8	19.6	15.1	11.1						14.2	10.5	9	7.3	5.6	210
215						26.3	25.1	22.8	19.2	14.8	10.9						13.8	10.1	8.5	6.8	5.1	215
220							24.1	21.8	18.8	14.5	10.6						13.4	9.8	8	6.4	4.7	220
225							23.2	20.8	18.4	14.2	10.4						13	9.6	7.7	6	4.3	225
230							22.3	19.9	18.1	13.9	10.2							9.3	7.5	5.5	3.9	230
235							21.4	19	17.5	13.6	10							9	7.3	5.1	3.6	235
240							20.6	18.2	16.6	13.3	9.8							8.7	7.1	4.8	3.2	240
245								17.4	15.8	12.9	9.6							8.4	6.9	4.6	2.8	245
250								16.6	14.9	12.2	9.4								6.7	4.4		250
255								15.8	14.1	11.4	9.2								6.6	4.2		255
260								15.1	13.3	10.9	9								6.4	4		260
265									12.6	10.4	8.8								6.2	3.8		265
270									11.8	9.9	8.5								6.1	3.6		270
275									11.2	9.5	8.1								5.9	3.4		275
280									10.8	9.1	7.7									3.2		280
285									10.4	8.7	7.3									3.1		285
290										8.3	6.9									2.9		290
295										7.9	6.6									2.7		295
300										7.6	6.2											300
305										7.3	5.9											305
310											5.5											310
315											5.2											315
320											4.9											320
325											4.7											325
I	92											92										I
II	46											92										II
III	46											92										III
IV	0											0										IV
V	0											0										V
VI	0											0										VI

% %

* adapter / pièce d'adaptateur

TAB 118136.3/4

Lifting capacities on the luffing lattice jib.
Forces de levage à la fléchette treillis relevable.

LTM 1500

75°
53 ft – 258 ft

69 ft – 299 ft

32'10" x 31'6"

360°

330700 lbs

85%

ft	189 ft + 13 ft*							223 ft + 13 ft*				258 ft + 13 ft*		ft
	69 ft	92 ft	115 ft	138 ft	161 ft	184 ft	207 ft	69 ft	92 ft	115 ft	138 ft	69 ft	92 ft	
100	35.5													100
105	33.6													105
110	31.9													110
115	30.3	27.3						17.7						115
120		25.8						16.6						120
125		24.4	22.7					15.5	11.5			6.8		125
130		23.1	21.5					14.5	10.8			6.4		130
135		22.1	20.3	18					10.2	8.9		6.1		135
140		21.2	19.2	16.9					9.7	8.4			3.1	140
145			18.2	15.9	13.2				9.3	7.9	6.3		2.8	145
150			17.3	14.9	12.3				8.8	7.5	5.8		2.5	150
155			16.5	14	11.5	9.2				7.1	5.4		2.3	155
160			15.8	13.1	10.7	8.7				6.7	5			160
165				12.3	10.1	8.2	6.2			6.4	4.7			165
170				11.9	9.6	7.7	5.8			6.1	4.4			170
175				11.5	9.2	7.3	5.4			5.8	4.1			175
180				11.1	8.8	6.9	4.9				3.8			180
185				10.7	8.4	6.4	4.5				3.5			185
190				10.3	8.1	6	4				3.2			190
195					7.7	5.6	3.7				3			195
200					7.4	5.2	3.3							200
205					7.1	4.9	2.9							205
210						4.7	2.5							210
215						4.4	2.3							215
220						4.2								220
225						4								225
230						3.8								230
235						3.5								235
I	92							92				92		I
II	92							92				92		II
III	92							92				92		III
IV	46							92				92		IV
V	42							46				92		V
% VI	0							46				92		VI %

* adapter / pièce d'adaptateur

TAB 118138.5

Lifting heights.
Hauteurs de levage.

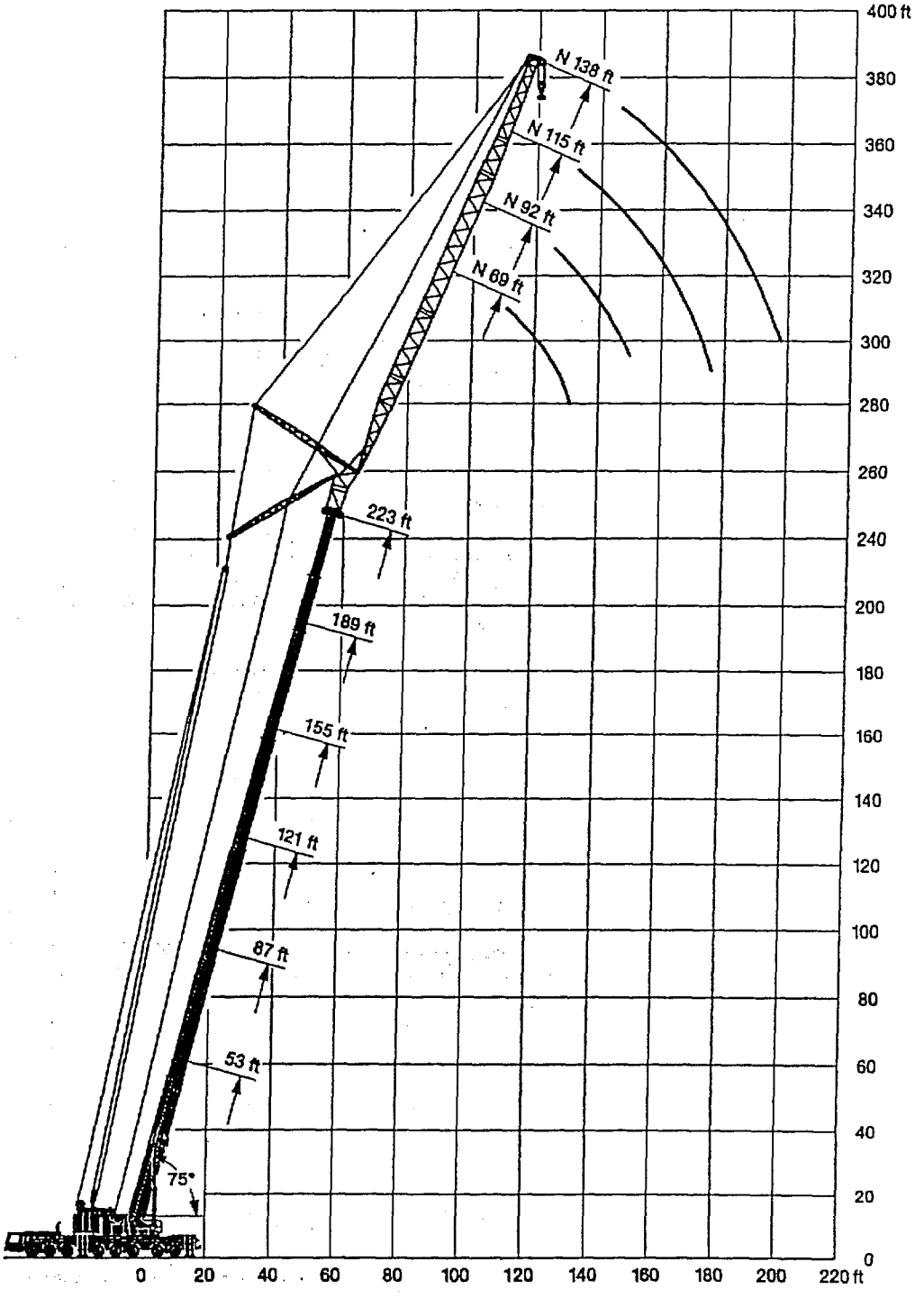

Telescopic boom / Flèche télescopique: 75°.

Lifting capacities on the luffing lattice jib with guyed telescopic boom.

Forces de levage à la fléchette treillis relevable avec flèche télescopique haubanée.

LTM 1500

83°
121 ft – 258 ft

69 ft – 299 ft

32'10" x 31'6"

360°

330700 lbs

85%

ft	121 ft + 13 ft*											155 ft + 13 ft*											ft
	69ft	92ft	115ft	138ft	161ft	184ft	207ft	230ft	253ft	276ft	299ft	69ft	92ft	115ft	138ft	161ft	184ft	207ft	230ft	253ft	276ft	299ft	
60	147																						60
65	143																						65
70	134											110											70
75	124	118										108	90.5										75
80	116	115	103	89								106	89										80
85	109	107	99.5	87.5								104	87.5										85
90		101	97.5	85.5	71.5	57.4						98	85.5	73	61								90
95		95.5	93.5	83.5	70.5	56.9	45.8						84	72.5	60.5	50	41						95
100		90	88.5	81.5	69.5	56.3	45.3	35.5					82.5	72	59.8	49.5	40.7	33					100
105			83.5	79.5	68	55.8	44.9	35.3	27.5				81	71.5	59.1	49	40.3	32.7	26.2				105
110			79.5	77.5	67	55	44.4	35	27.3				77	71	58.6	48.5	39.9	32.3	25.9				110
115			75.5	74	66	54.4	43.9	34.7	27.1	20.5				70	58.2	48.1	39.5	32	25.6	20.3			115
120			72	70.5	65.5	53.8	43.5	34.3	26.9	20.3	14.8			68.5	57.8	47.6	39.1	31.6	25.4	20.1	14.9		120
125			68.5	67	65.5	53.2	43	33.9	26.5	20.1	14.6			65	57.3	47.2	38.7	31.3	25.1	19.9	14.7	10.3	125
130			65.5	64	62.5	52.6	42.6	33.6	26.3	19.9	14.4			62	56.8	47	38.3	31	24.9	19.6	14.5	10.3	130
135				61.5	59.9	52.1	42.1	33.2	26	19.7	14.2			59.5	56.3	46.9	38	30.7	24.6	19.4	14.3	10.2	135
140				58.6	57.2	51.8	41.7	32.9	25.7	19.4	14.1				55.1	46.8	37.7	30.4	24.3	19.2	14.1	10.1	140
145				56.2	54.7	51.7	41.4	32.5	25.4	19.2	13.9				53.1	46.6	37.6	30.1	24.1	19	13.9	10	145
150				54.1	52.6	50.5	41.4	32.2	25.1	19	13.6				50.9	46.5	37.4	29.8	23.8	18.7	13.7	9.8	150
155					50.5	48.5	41.4	31.9	24.9	18.7	13.4				48.8	46.4	37.3	29.6	23.6	18.5	13.5	9.7	155
160					48.5	46.5	41.4	31.6	24.6	18.5	13.2					45.4	37.2	29.4	23.3	18.2	13.4	9.5	160
165					46.6	44.5	41.4	31.4	24.4	18.3	13					43.5	37.1	29.4	23.1	18	13.2	9.4	165
170					44.8	42.7	41.3	31.4	24.1	18.1	12.8					41.8	37	29.4	22.9	17.8	13	9.3	170
175					43.1	41	40.1	31.4	23.9	17.9	12.6					40.2	36.9	29.4	22.8	17.6	12.9	9.1	175
180						39.5	38.6	31.4	23.7	17.7	12.4					38.7	36.2	29.4	22.7	17.4	12.7	9	180
185						38	37	31.4	23.5	17.5	12.2						35.1	29.4	22.6	17.2	12.5	8.9	185
190						36.5	35.6	31.4	23.2	17.3	12.1						33.7	29.4	22.5	17.2	12.4	8.8	190
195						35.2	34.3	31.4	22.9	17.2	11.9						32.5	29.4	22.5	17.2	12.2	8.7	195
200							33	30.7	22.7	17.1	11.7						31.3	29.2	22.4	17.2	12.1	8.6	200
205							31.7	29.7	22.4	17.1	11.6							28.7	22.3	17.2	12.1	8.4	205
210							30.6	28.5	22.1	16.9	11.5							27.9	22.2	17.2	12	8.3	210
215							29.5	27.6	21.9	16.7	11.4							26.8	22.1	17.2	12	8.2	215
220							28.4	26.6	21.6	16.5	11.2							25.8	22.1	17.2	12	8.1	220
225								25.6	21.4	16.3	11							24.9	22	17.2	11.9	8	225
230								24.6	21.1	16.1	10.8								21.8	17.2	11.9	8	230
235								23.7	20.9	15.9	10.6								21.1	17.2	11.9	8	235
240								22.8	20.6	15.7	10.4								20.3	17.2	11.9	8	240
245									20.3	15.6	10.2								19.5	17	11.8	8	245
250									19.7	15.4	10.1									16.5	11.8	8	250
255									18.8	15.2	9.9									15.6	11.8	8	255
260									18	15.1	9.7									14.9	11.6	8	260
265									17.3	14.7	9.5									14.2	11.2	8	265
270										14.2	9.3									13.5	10.8	8	270
275										13.5	9.2									12.8	10.4	8	275
280										12.7	9										10	8	280
285										12.1	8.8										9.6	7.9	285
290											8.7										9.3	7.8	290
295											8.5										8.9	7.4	295
300											8.5											7.1	300
305											8.5											6.8	305
310											8.4											6.5	310
315																						6.2	315
320																						5.9	320
I	92											92											I
II	46											92											II
III	46											92											III
IV	0											0											IV
V	0											0											V
% VI	0											0											VI %

* adapter / pièce d'adaptateur

TAB 118157.1/2/3/4

83°
189 ft – 258 ft

69 ft – 276 ft

32'10" x 31'6"

360°

330700 lbs

85%

ft	189 ft + 13 ft*										223 ft + 13 ft*								258 ft + 13 ft*						ft
	69ft	92ft	115ft	138ft	161ft	184ft	207ft	230ft	253ft	276ft	69ft	92ft	115ft	138ft	161ft	184ft	207ft	230ft	69ft	92ft	115ft	138ft	161ft	184ft	
75	73.5																								75
80	73	59.8									45.8								26.4						80
85	72.5	59.1									45.4								26.1						85
90	72.5	58.5	49.1								45.2	36							26						90
95		58.1	48.6	40.8							45	35.7	28.9						25.9	18.8					95
100		58	48	40.4	33.3	26.4						35.5	28.6	22.6						18.6	14.4	10.7			100
105		57.8	47.5	39.9	32.9	26.4	19.7					35.3	28.3	22.4	17.4	12.8				18.4	14.2	10.5	7.4		105
110		57.7	47.3	39.5	32.5	26.1	19.7					35.1	28.1	22.2	17.2	12.6				18.3	14	10.3	7.2		110
115		57.5	47	39.1	32.2	25.8	19.7	14.1				34.9	27.9	22	17	12.4	8.9			18.2	13.7	10.1	7.1	4.3	115
120			46.8	38.7	31.9	25.5	19.7	14.1	9.3				27.9	21.8	16.9	12.2	8.8	6		18.1	13.6	10	6.9	4.2	120
125			46.6	38.4	31.6	25.3	19.7	14.1	9.3	5.6			27.8	21.6	16.7	12.1	8.7	6			13.4	9.8	6.8	4	125
130			46.4	38.2	31.3	25	19.6	14.1	9.3	5.6			27.8	21.5	16.5	11.9	8.5	5.9			13.3	9.6	6.7	3.9	130
135			46.2	38.1	31	24.7	19.4	14.1	9.3	5.6			27.7	21.4	16.3	11.8	8.4	5.8			13.2	9.4	6.5	3.8	135
140				38	30.8	24.5	19.2	14.1	9.3	5.6			27.6	21.3	16.2	11.6	8.3	5.7			13.1	9.3	6.4	3.7	140
145				37.8	30.7	24.2	19	14.1	9.3	5.6				21.2	16	11.5	8.1	5.6				9.2	6.2	3.6	145
150				37.7	30.6	24	18.8	14.1	9.3	5.6				21.1	16	11.4	8	5.5				9.1	6.1	3.5	150
155				37.5	30.4	23.9	18.6	14.1	9.3	5.6				21	15.9	11.2	7.9	5.4				9	6	3.3	155
160				37.4	30.3	23.8	18.4	14	9.3	5.6				20.9	15.9	11.1	7.8	5.3				8.9	6	3.2	160
165					30.2	23.8	18.2	13.9	9.3	5.6					15.8	11	7.7	5.2				8.9	5.9	3.1	165
170					30	23.7	18	13.8	9.3	5.6					15.8	11	7.6	5.1				8.8	5.8	3	170
175					29.9	23.7	17.9	13.6	9.3	5.6					15.7	11	7.5	5					5.8	3	175
180					29.8	23.7	17.9	13.5	9.3	5.6					15.7	11	7.4	5					5.7	2.9	180
185						23.6	17.8	13.3	9.3	5.6					15.6	10.9	7.4	4.9					5.7	2.8	185
190						23.6	17.7	13.3	9.3	5.6					15.5	10.9	7.3	4.8					5.6	2.7	190
195						23.5	17.7	13.3	9.2	5.6						10.8	7.3	4.7						2.6	195
200						23.5	17.6	13.3	9.1	5.6						10.7	7.2	4.6						2.5	200
205						23.4	17.6	13.3	9.1	5.6						10.7	7.2	4.6						2.5	205
210							17.5	13.3	9	5.6							7.1	4.5						2.4	210
215							17.5	13.3	9	5.6							7.1	4.5						2.3	215
220							17.4	13.3	9	5.6							7	4.5							220
225							17.3	13.3	9	5.6							7	4.5							225
230								13.3	9	5.6							6.9	4.4							230
235								13.3	9	5.6							6.9	4.4							235
240								13.3	9	5.6								4.4							240
245								13.3	9	5.6								4.4							245
250								13.3	9	5.6								4.3							250
255								13.3	9	5.6								4.3							255
260									9	5.6															260
265									9	5.6															265
270									9	5.6															270
275									9	5.6															275
280										5.6															280
285										5.6															285
290										5.6															290
295										5.6															295
300										5.6															300
I	92										92								92						I
II	92										92								92						II
III	92										92								92						III
IV	46										92								92						IV
V	46										46								92						V
% VI	0										46								92						% VI

* adapter / pièce d'adaptateur

TAB 118157.5/8

Lifting heights on the luffing lattice jib with guyed telescopic boom.

Hauteurs de levage à la fléchette treillis relevable avec flèche télescopique haubanée.

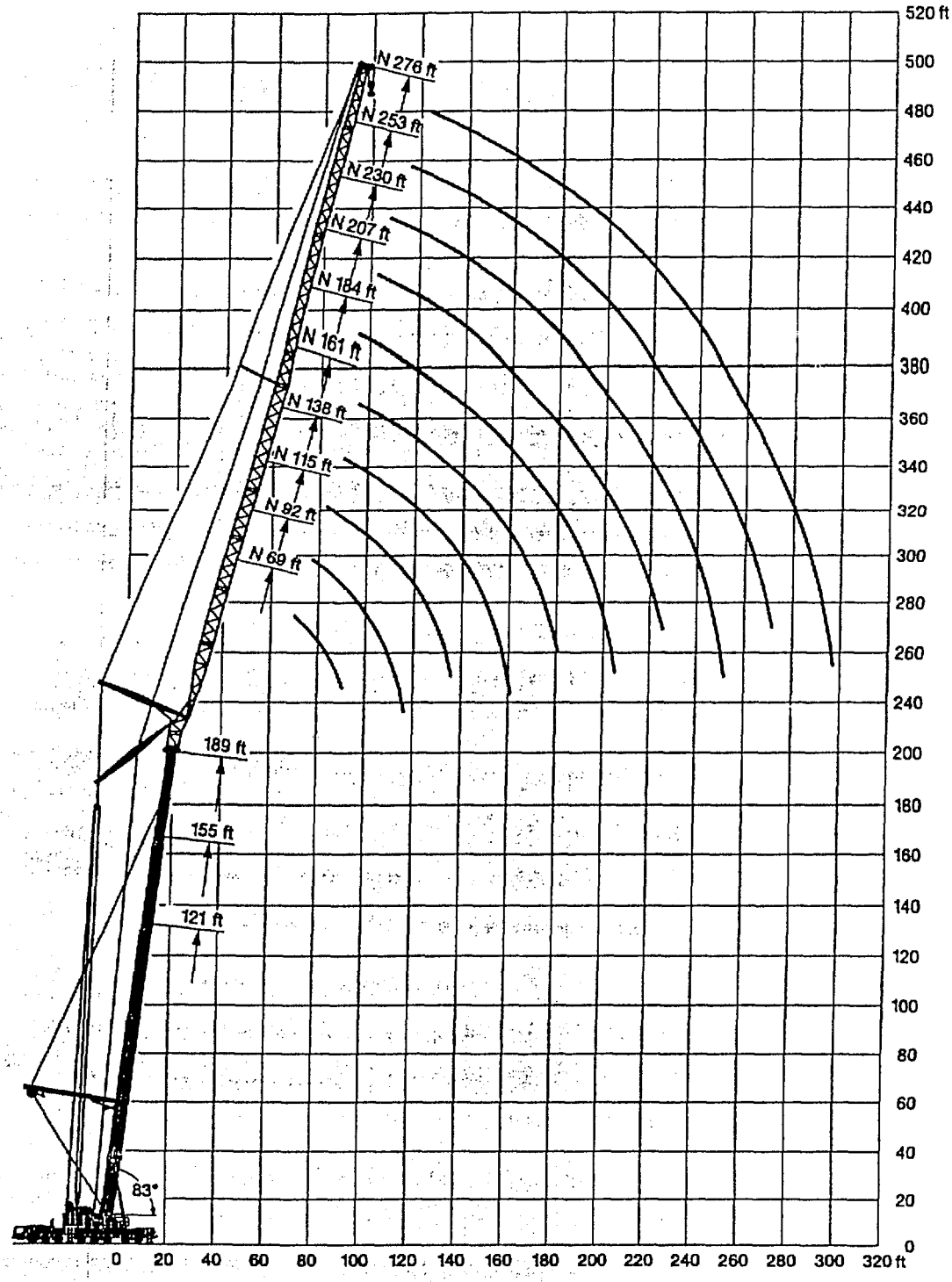

Telescopic boom / Flèche télescopique: 83°

Dimensions.
Encombrement.

With 164 ft long telescopic boom.
Avec flèche télescopique de 164 ft.

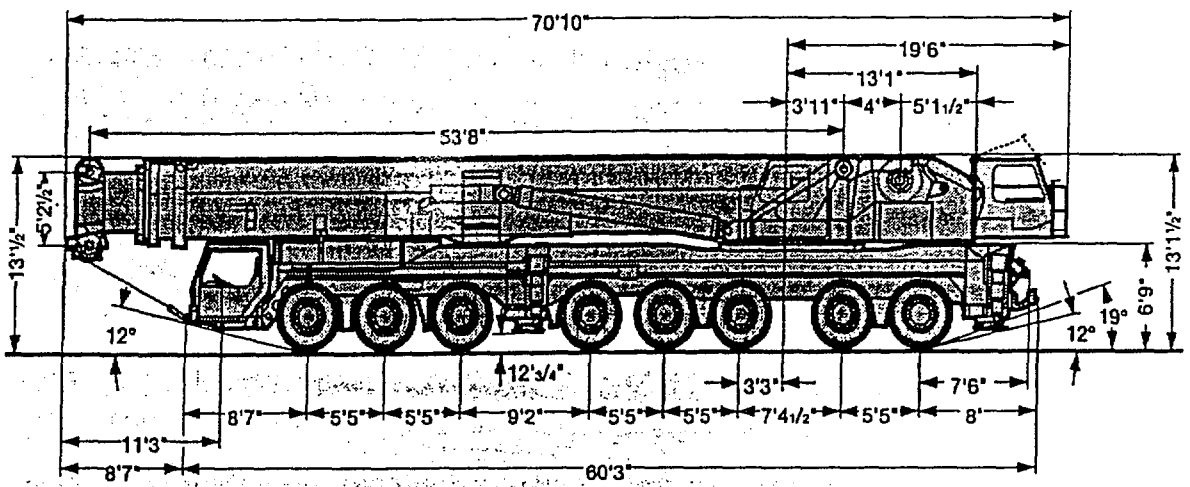

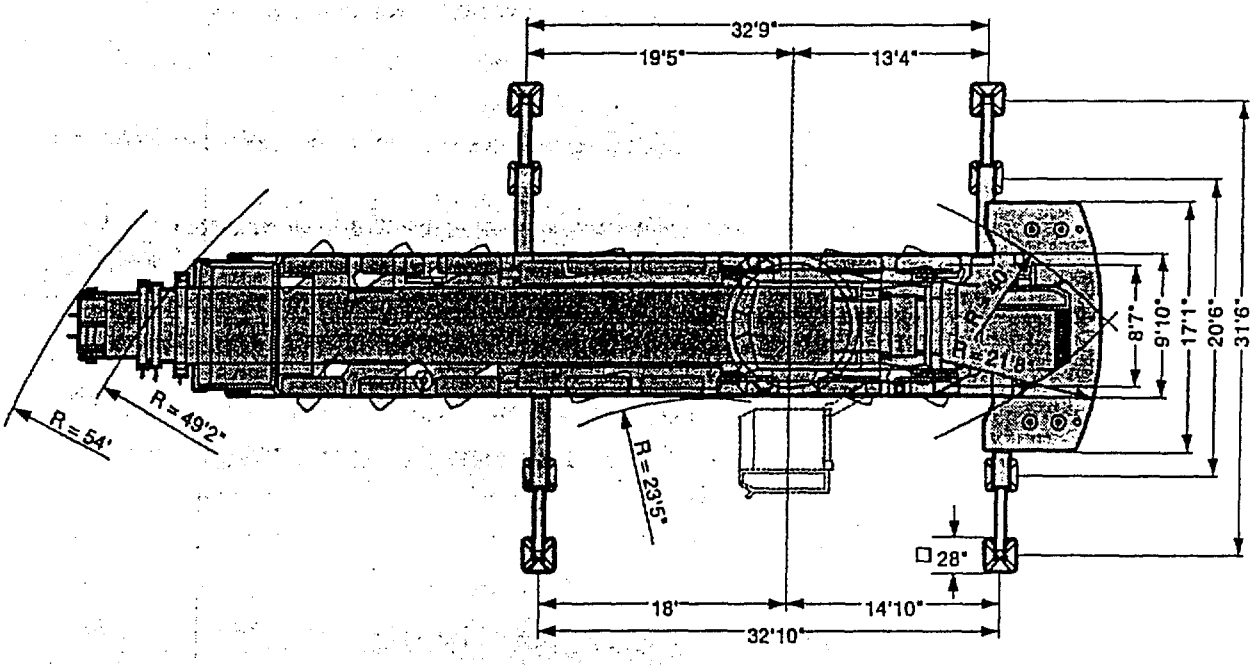

Tyres 14.00 R 25
Pneumatiques 14.00 R 25

Dimensions.
Encombrement.

With 276 ft long telescopic boom.
Avec flèche télescopique de 276 ft.

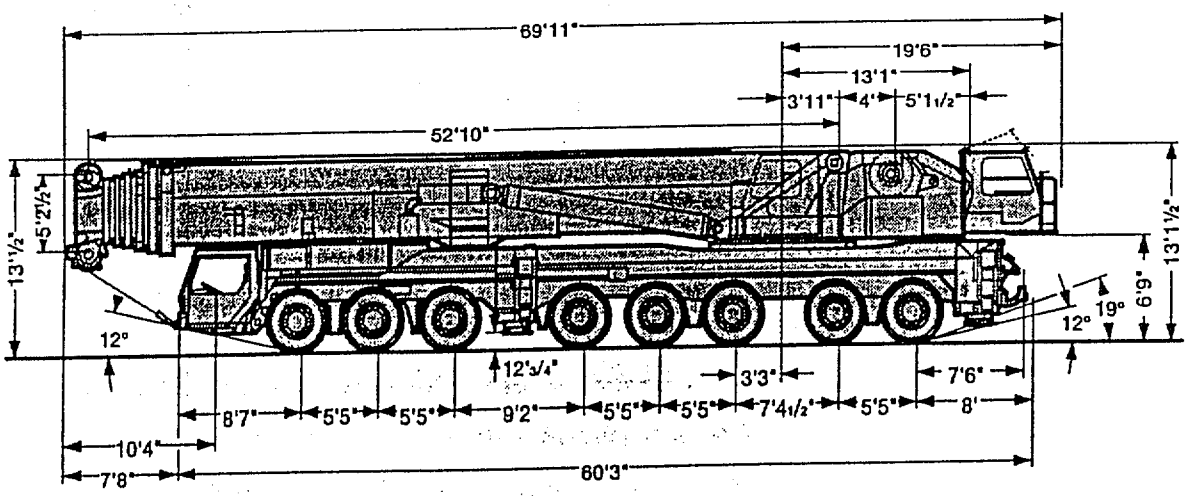

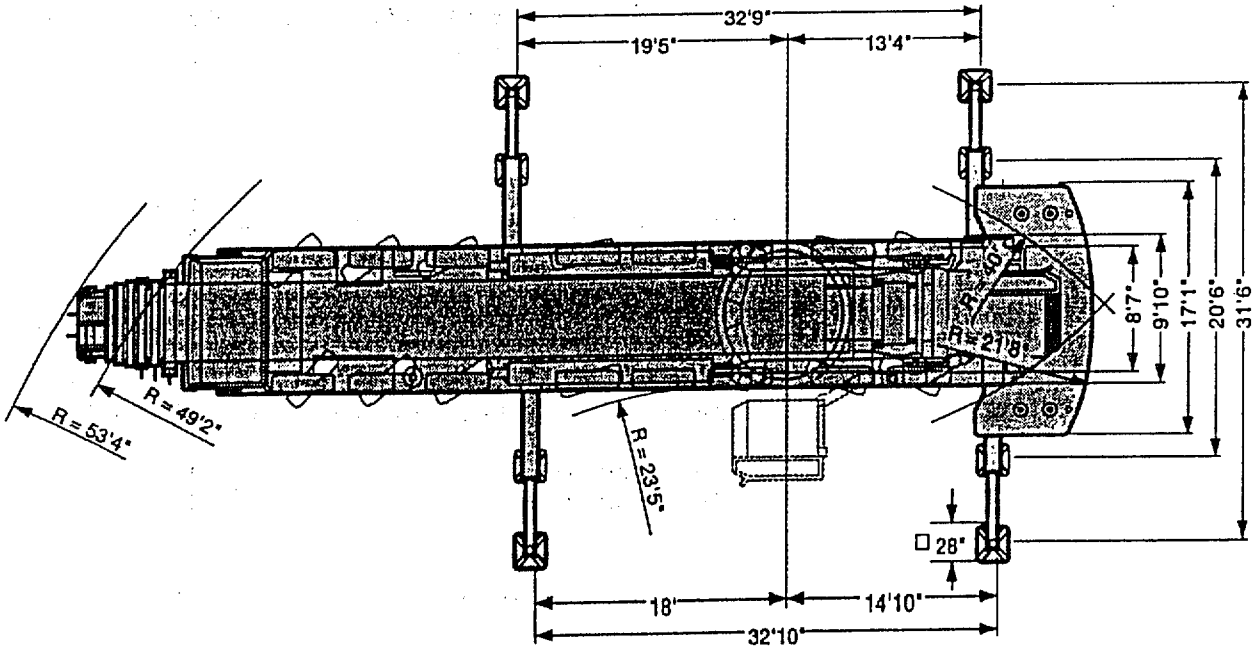

Tyres 16.00 R 25
Pneumatiques 16.00 R 25

Weights.
Poids.

Axle Essieu	1	2	3	4	5	6	7	8	Total weight Poids total
lbs	26450	26450	26450	26450	26450	26450	26450	26450	211640*

* with 164 ft long telescopic boom / avec flèche télescopique de 164 ft

Load (kips)[1] Forces de levage kips[1]	No. of sheaves Poulies	No. of lines Brins	Weight lbs Poids lbs	Type Type
308	13	27	7500	320 DSM
270	11	23	7700	250 DSM
187	7	15	6060	200 DSM
88	3	7	3970	80 DM
40	1	3	2710	40 EM
13.7	–	1	1320	12,5 E

[1] The safety regulations of the respective country shall be applicable.
Les spécifications de sécurité du pays concerné seront en vigueur.

Working speeds.
Vitesses.

	1	2	3	4	5	R	%	1	2	3	4	5	R	%
mph	5	13	20.5	29.6	43.5	8.7	17 %	8.9	14.3	22.5	32.6	47.8	9.6	15,4 %
mph	1.2	7.5	11.6	17.4	24.6	5.3	31 %	1.4	8.2	13	19.1	27.3	5.6	28 %
	14.00 R 25							16.00 R 25						

Drive Mécanismes	infinitely variable en continu	Rope diameter / Rope length Diamètre du câble / Longueur du câble	Max. single line pull Effort au brin maxi.
1	0 – 426 ft/min single line ft/min au brin simple	1" / 1476'	41300 lbs
2	0 – 475 ft/min single line ft/min au brin simple	1" / 2460'	41300 lbs
360°	0 – 1 rpm		
	approx. 70 seconds to reach -1° to 83° boom angle env. 70 s jusqu'à -1° à 83°		
	approx. 250 seconds for boom extension from 52 ft – 164 ft env. 250 s pour passer de 52 ft – 164 ft	approx. 500 seconds for boom extension from 52 ft – 276 ft env. 500 s pour passer de 52 ft – 276 ft	

Crane carrier.

Frame:	Liebherr designed and manufactured, box-type, torsion resistant design of high-tensile fine grained structural steel.
Outriggers:	Four hydraulically extendable sliding beams with hydraulic jacks and supporting pads. The front outrigger casing is mounted between axles 3 and 4 and the rear casing is located at the rear of the carrier. Supporting basis: 32'10" longitudinally x 31'6" transversally.
Engine:	8-cylinder Diesel engine, make Liebherr, type D 9408 TI-E A4, watercooled, output acc. to DIN 440 kW (598 HP) at 2000 rpm acc. to ECE-R 24.03 and ECE-R 49.02 (EURO II), max. torque 1880 lbs-ft at 1400 rpm, electronic engine management by data bus technique. Fuel tank: 158 gallons.
Transmission:	Automatic transmission, make Allison, type CLBT 755, with torque converter and hydrodynamic brake, 5 forward speeds, 1 reverse. Transfer case with lockable transfer differential and off-road ratio.
Axles:	Heavy-duty vehicle axles. All axles suspended. Axles 1 to 4 and 7 and 8 steered. Axles 1, 2, 4 and 5 are planetary axles.
Suspension:	All axles with hydropneumatic suspension and automatic levelling system. Load equalization between the axle pairs. The suspension can be locked hydraulically.
Tyre equipment:	16 tyres, all axles equipped with single tyres. Size of tyres: 14.00 R 25.
Steering:	ZF semi-integral power steering, dual circuit system with hydraulic servo-system and additional backing pump driven by an axle.
Brakes:	Service brake: All-wheel servo-air brake, dual circuit system. Additional brakes: Retarder, TELMA-type eddy current brake. Hand brake: Spring-loaded, acting on all wheels of axles 4 to 8.
Driving cab:	Spacious and comfortable sheet steel cab mounted on rubber shock absorbers, safety glass windows, operating and control elements.
Electrical system:	Modern data bus technique, 24 Volt DC, 2 batteries of 143 Ah each, lighting according to traffic regulations.

Crane superstructure.

Frame:	Liebherr-made torsion resistant, welded construction of high-tensile structural steel, linked to carrier by a three-row roller slewing rim for 360° continuous rotation.
Crane engine:	6-cylinder Diesel engine, make Liebherr, type D 926 TI-E A4, watercooled, output acc. to DIN 240 kW (326 HP) at 1800 rpm, max. torque 1070 lbs-ft at 1200 rpm.
Crane drive:	Diesel-hydraulic, with 4 axial piston variable displacement pumps, with servo-control and capacity control operating in closed circuit for hoisting, slewing and luffing of lattice jib, 4 axial piston pumps, operating in open circuit for luffing and telescoping.
Crane control:	Two self-centering control levers (joy-sticks). Pedal switches for telescoping. Infinitely variable crane motions through displacement control of the hydraulic pumps. Additional working speed control by variation of the Diesel engine speed.
Hoist gear:	Axial piston variable displacement motor, Liebherr hoist drum with integrated planetary gear and spring-loaded static brake.
Luffing gear:	2 differential hydraulic rams with nonreturn valve.
Slewing gear:	2 slewing gears, consisting of hydraulic motor, planetary gear, slewing pinion and spring-loaded static brake each.
Crane cab:	Aluminium design with safety glass, operating and control elements. Cab tiltable backwards. The cab will be pivoted to the rear for road transport.
Safety devices:	LICCON safe load indicator, test system, hoist limit switches, safety valves against rupture of pipes and hoses.
Counterweight:	165 t total counterweight comprising 1 basic slab of 16.5 t and 9 slabs of 16.5 t each.
Telescopic boom:	Variant 1: Boom length 53 ft to 164 ft, consisting of 1 base section and 3 hydraulic telescopic sections. All telescopic sections extendable individually by means of the rapid-cycle telescoping system TELEMATIK. Variant 2: Boom length 53 ft to 276 ft, consisting of 1 base section and 6 hydraulic telescopic sections. All telescopic sections extendable individually by means of the rapid-cycle telescoping system TELEMATIK.
Electric system:	Modern data bus technique, 24 Volt DC, 2 batteries of 143 Ah each.

Complementary equipment.

Guying system for telescopic boom:	Consisting of guying frame with 2 rope winches, mountable to the 164 ft or 276 ft long telescopic boom, tiltable in transport condition.
Additional ballast:	2 additional counterweight slabs of 16.5 t each for a total counterweight of 198 t, required for the operation with guyed telescopic boom.
Telescopic boom extension:	46 ft lattice section for extending the 164 ft long telescopic boom in order to mount the luffing or fixed lattice jib.
Lattice jibs:	Fixed lattice jib 46 ft to 207 ft long, luffing lattice jib 69 ft to 299 ft long.
2nd hoist gear:	Axial piston variable displacement motor, Liebherr-made hoist drum with integrated planetary gear and spring-loaded static brake. The 2nd hoist gear is required for 2-hook operation.
3rd hoist gear with luffing block:	Axial piston variable displacement motor, Liebherr-made hoist drum with integrated planetary gear and spring-loaded static brake, required for operating the luffing jib.
Tyre equipment:	16 tyres, size 16.00 R 25.
Drive/steering:	16 x 8 x 14, 5th axle steered additionally.

Châssis porteur.

Châssis:	Fabrication Liebherr, construction en caisson indéformable, en acier à haute résistance à grains fins.
Stabilisateurs:	Quatre poutres horizontales télescopiques, avec vérins hydrauliques de calage verticaux et patins. Les caissons de poutres de calage avants sont situés entre les essieux 3 et 4, et les caissons des poutres de calage arrières sont situés à l'arrière du châssis. Surface de calage: 32'10" en long et 31'6" travers.
Moteur:	Diesel 8 cylindres, marque Liebherr, type D 9408 TI-E A4, refroidi par eau, puissance selon DIN 440 kW (598 ch) à 2000 rpm selon ECE-R 24.03 et ECE-R 49.02 (EURO II), couple max. 1880 lbs-ft à 1400 rpm, gestion électronique par BUS de données. Réservoir à carburant: 158 gallons.
Boîte de vitesse:	Boîte automatique de marque Allison, type CLBT 755, avec convertisseur de couple et ralentisseur hydraulique intégré. Cinq rapports avants et 1 rapport arrière. Boîte de transfert avec blocage de différentiel et étage vitesses terrain.
Essieux:	Essieux spéciaux pour grue. Les 8 essieux sont suspendus. Les essieux 1 à 4 et 7 et 8 sont directeurs. Les essieux 1, 2, 4 et 5 sont entraînés.
Suspension:	Tous les essieux sont suspendus hydropneumatiquement avec mise à niveau et équilibrage entre essieux automatiques. Suspension blocable hydrauliquement.
Pneumatiques:	16 roues à monte simple. Taille: 14.00 R 25.
Direction:	Direction semi-bloc ZF, à double circuit, assistée hydrauliquement, avec pompe auxiliaire entrainée par un essieu.
Freins:	Frein de service: à double circuit assisté pneumatiquement, sur toutes les roues. Frein auxiliaire: par clapets sur échappement commandés avec le ralentisseur hydraulique, ralentisseur électrodynamique Telma. Frein de secours et frein à main: par cylindres à ressorts sur les essieux 4 à 8.
Cabine:	Cabine spacieuse, en tôle d'acier, équipement «grand confort», suspendue sur silent blocs, vitrage de sécurité, tableau de bord complet.
Installation électrique:	Technique moderne de transmission de données par BUS de données, courant continu 24 Volts, 2 batteries de 143 Ah chacune, éclairage conforme au code de la route.

Partie tournante.

Châssis:	Construction mécanosoudée en tôle d'acier à haute résistance à grains fins. Reliée au porteur par une couronne d'orientation à 3 rangées de rouleaux. Rotation totale 360°.
Moteur:	Diesel 6 cylindres, marque Liebherr, type D 926 TI-E A4, refroidi par eau, puissance DIN 240 kW (326 ch) à 1800 rpm, couple max. 1070 lbs-ft à 1200 rpm.
Entraînement:	Diesel hydraulique avec à 4 pompes à débit variable servo commandées à régulation de puissance en circuit fermé pour les treuils et l'orientation. Quatre pompes à débit variable en circuit ouvert pour le relevage de flèche et le télescopage.
Commande:	2 leviers à 4 directions avec rappel automatique au point mort. Commande au pied pour le télescopage. Commande des mouvements progressive en continu par variation de l'inclinaison des pompes et augmentation du régime moteur.
Treuil:	Moteur hydraulique à cylindrée variable, treuil de marque Liebherr avec réducteur planétaire à frein d'arrêt à lamelles intégrées.
Relevage de flèche:	2 vérins hydrauliques différentiels avec clapets anti-retour de sécurité.
Orientation:	2 mécanismes d'orientation, composés d'un moteur hydraulique, d'un réducteur planétaire, d'un pignon d'orientation et d'un frein à lamelles.
Cabine de grue:	En tôle d'aluminium avec vitrage de sécurité, tous les instruments de commande et de contrôle. Cabine inclinable, tournée sur l'arrière de la grue en position route.
Sécurités:	Contrôleur de charge LICCON, système test, fin de course crochet haut, clapets de sécurité en cas de ruptures de flexibles.
Contrepoids:	Total 165 t, composé d'une plaque de base et 9 plaques de 16.5 t unitaires.
Flèche télescopique:	Variante 1: télescope de 53 ft à 164 ft, composé d'un élément de base et de 3 télescopes, télescopables hydrauliquement. Chaque partie peut être télescopée individuellement à l'aide du système de télescopage séquentiel rapide TELEMATIK. Variante 2: télescope de 53 ft à 276 ft, composé d'un élément de base et de 6 télescopes, télescopables hydrauliquement. Chaque partie peut être télescopée individuellement à l'aide du système de télescopage séquentiel rapide TELEMATIK.
Circuit électrique:	Technique moderne de transmission de données par BUS de données. Courant continu 24 Volts, 2 batteries de 143 Ah chacune.

Equipement optionnel.

Haubanage de flèche:	Composé du chevalet et de 2 treuils, montables sur flèche télescopique de 164 ft ou de 276 ft.
Contrepoids complémentaire:	2 plaques complémentaires de 16.5 t, pour une masse totale de 198 t, pour travail en télescope haubané.
Rallonge de flèche télescopique:	Eléments treillis de 46 ft pour rallongement de la flèche télescopique de 164 ft pour utilisation de la fléchette fixe ou de la fléchette à volée variable.
Fléchettes:	Fléchette fixe de 46 ft à 207 ft; fléchette à volée variable de 69 ft à 299 ft.
Deuxième treuil:	Moteur hydraulique à pistons axiaux à cylindrée variable, treuil Liebherr, avec réducteur planétaire intégré et frein d'arrêt à lamelles; deuxième treuil nécessaire pour travail à 2 crochets.
Troisième treuil avec train de mouflage:	Moteur hydraulique à pistons axiaux à cylindrée variable, treuil Liebherr, avec réducteur planétaire intégré et frein d'arrêt à lamelles; troisième treuil nécessaire pour le relevage de la volée variable.
Pneumatiques:	16 fois en taille 16.00 R 25.
Entraînement/direction:	16 x 8 x 14, essieu 5 directeur en sus.

Bigge Crane and Rigging Co.
10700 Bigge Avenue
San Leandro, CA 94577
Phone: (888) 337-BIGGE or (510) 638-8100
Fax: (510) 639-4053
Email: info@bigge.com
Web site: www.bigge.com

Subject to modification. / Sous réserve de modifications.

TP 267 b. US. 7.98

(909) 222-0202 www.reliablecraneservice.com 260 North Smith Ave. Corona, CA 92880