GROVE CRANE

GMK3050

All Terrain Hydraulic Crane

Dimensions

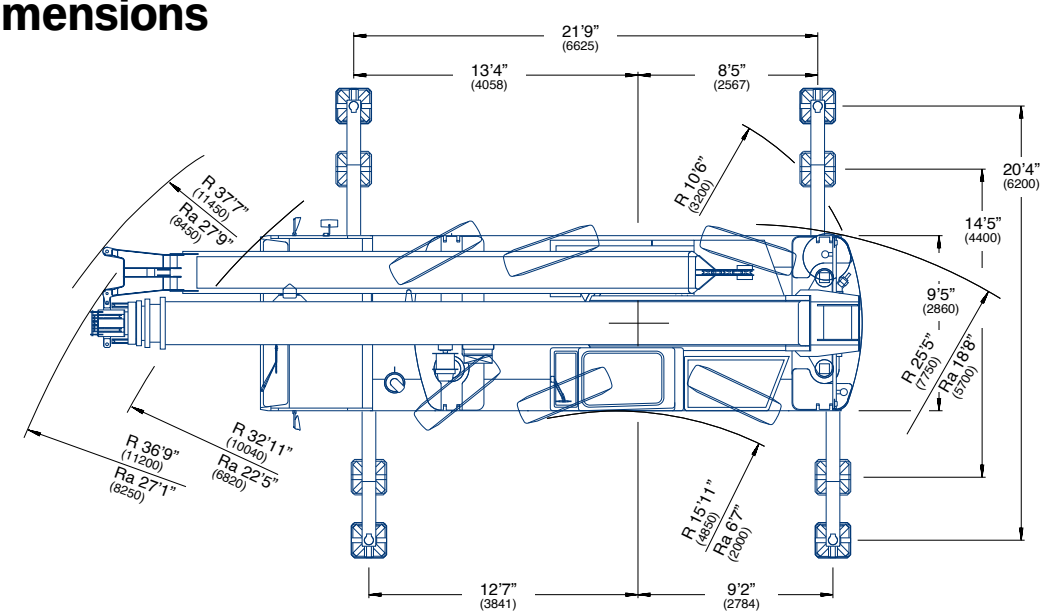

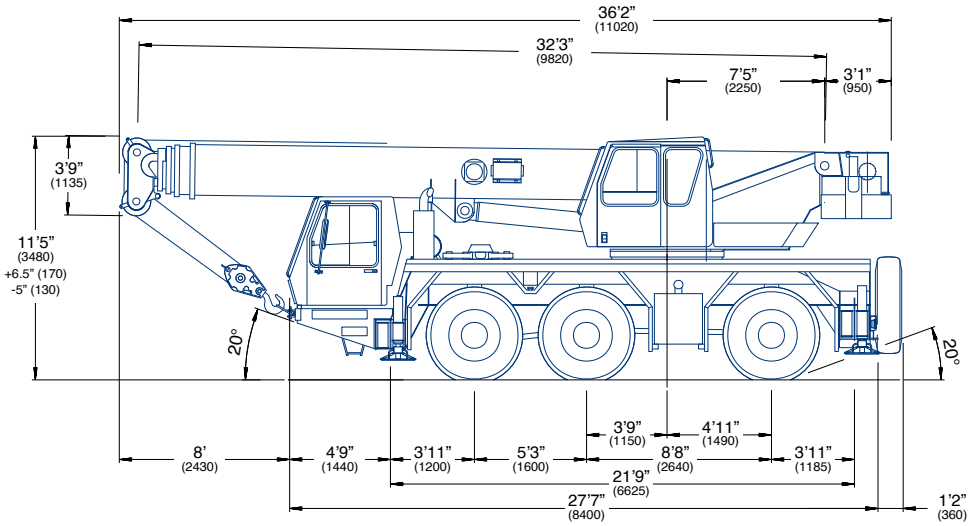

Note: ( ) Reference dimensions in mm

BASIC WEIGHTS (LBS.)	**Axles 1 & 2**	**Axle 3**	**Total**
With Mercedes Power, 6x4x6, 20.5 R25 Tires, 12,500 lbs Fixed Counterweight Hydraulic Oil Cooler, Brackets for Lattice Extension	45,632	28,548	74,180
Additions:			
Outrigger Pads	227	104	331
Auxiliary Hoist	-(712)	1,947	1,235
Lattice Extension - 28/49 ft	2,895	-(955)	1,940
Rooster Sheave	293	-(181)	112
6 x 6 Drive	962	-(168)	794
Electric Driveline Retarder	44	375	419
16.00 R25 Tires in lieu	-(370)	-(186)	-(556)
14.00 R25 Tires in lieu	-(899)	-(450)	-(1,349)
Spare Tire - 14.00 R25 (with stowage bracket)	-(282)	866	584
Spare Tire - 16.00 R25 (with stowage bracket)	-(352)	1,069	717
Spare Tire - 20.5 R25 (with stowage bracket)	-(408)	1,217	809

Working range

32 - 125 ft. (9.8 - 38.1 m)	28 - 49 ft. (8.7 - 15 m)	23,100 lbs. (10,500 kg)	100%	360°

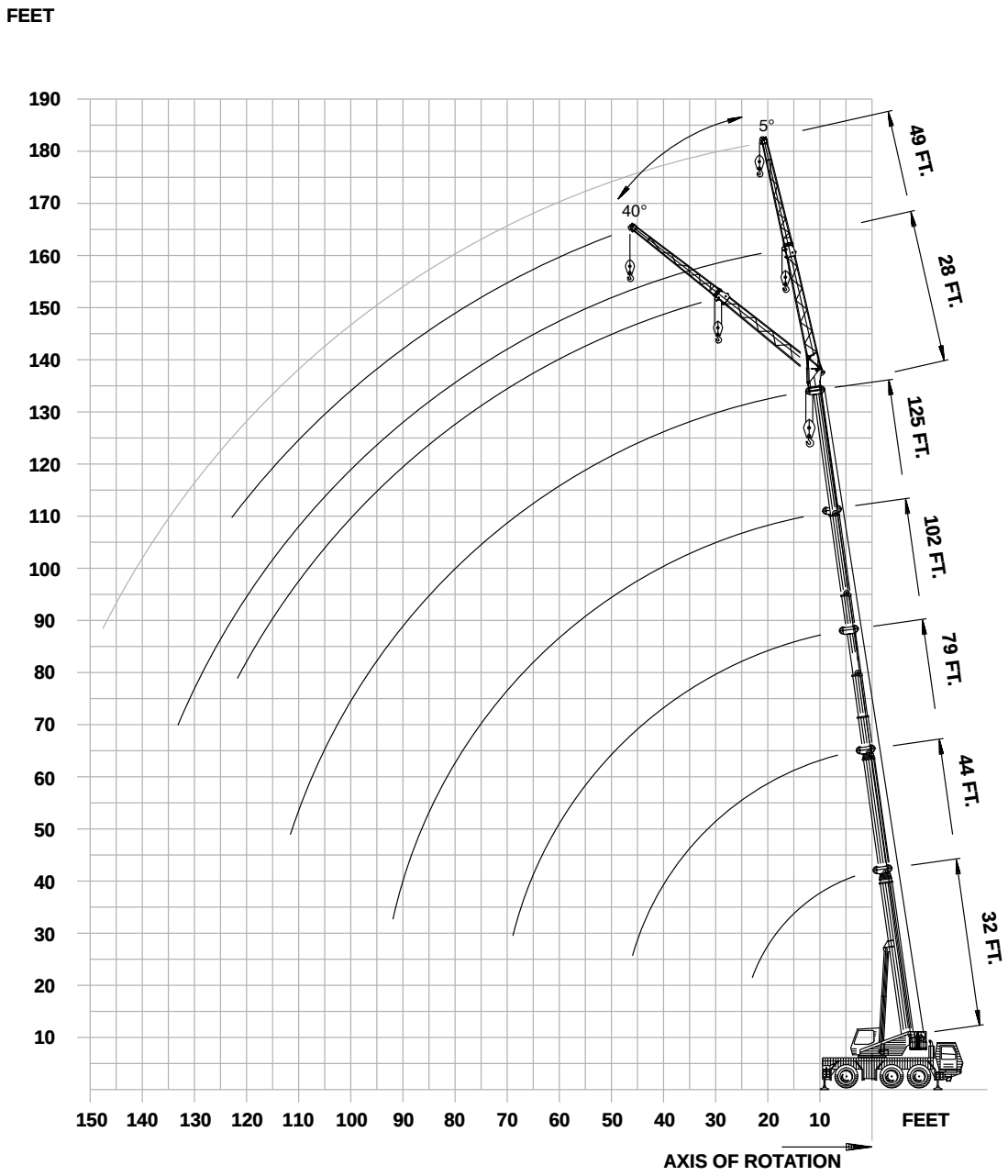

(909) 222-0202 www.reliablecraneservice.com 260 North Smith Ave. Corona, CA 92880

Superstructure specifications

Boom
32 ft. - 125 ft. (9.8 m - 38.1 m) five section, full-power boom. Maximum tip height: 133 ft. (40.5 m).

Boom Elevation
Single lift cylinder with safety valve provides boom angle from -3° to +82°.

Lattice Extension
28 ft. - 49 ft. (8.7 m - 15 m) lattice swingaway extension. Hydraulic offset / luffing capability 5° - 40°.

Load Moment & Anti-Two Block System
Load moment and anti-two block system with audio/visual warning and control lever lockout provides electronic display of boom angle, length, radius, tip height, relative load moment, maximum permissible load, load indication and warning of impending two-block condition.

Cab
Full vision aluminum cab, safety glass windows and adjustable operator's seat with hydraulic suspension. Other features include engine independent heater, armrest integrated crane controls, and ergonomically arranged instrumentation for carrier and superstructure.

Swing
Axial piston motor with planetary gear. Holding and service brake. Swing speed variable from 0 - 2.5 RPM.

Counterweight
23,150 lbs. (10 500 kg) consisting of various sections with hydraulic installation/removal system controlled from the cab.

Hydraulic system
Two separate open pump circuits with one axial piston variable displacement pump (load sensing) and one gear pump for swing. Thermostatically controlled oil cooler.

159 gallon (600 L) reservoir capacity.

All crane movements iinfinitely variable by hydraulic pilot circuit control levers with automatic reset to zero.

HOIST SPECIFICATIONS
Main Hoist
Axial piston variable displacement motor with planetary gear and multiple disc brake. Rope drum with special grooving. "Thumb-thumper" hoist drum rotation indicator alerts operator of hoist movement.

Single line pull:	9,900 lbs. (44 kN)
Single line speed:	394 ft./min. (120m/min)
Rope diameter:	16 mm
Rope length:	492 ft. (150 m)

Auxiliary Hoist
Axial piston variable displacement motor with planetary gear and multiple disc brake. Rope drum with special grooving. "Thumb-thumper" hoist drum rotation indicator alerts operator of hoist movement.

Single line pull:	9,900 lbs. (44 kN)
Single line speed:	394 ft./min. (120m/min)
Rope diameter:	16 mm
Rope length:	492 ft. (150 m)

* Optional equipment
*Second spotlight
*Stereo/cassette player
*Air Conditioning

***Denotes optional equipment**

(909) 222-0202 www.reliablecraneservice.com 260 North Smith Ave. Corona, CA 92880

Carrier specifications

Chassis
Box-type, torsion resistant frame is fabricated from high-strength steel.

Outrigger System
Four hydraulically telescoping beam outriggers with vertical cylinders and outrigger pads. Outriggers can be set in 2 positions:

Fully extended (100%) - 20’ 4” (6.2m)
Partially extended (50%) - 14’ 5” (4.4m)

Independent horizontal and vertical movement control on each side of the carrier and from the crane operator’s cab. Crane level indicators at each control station.

Engine
Mercedes-Benz OM501LA, diesel, 6 cylinders, water cooled, turbo charged and aftercooled, 349 HP (260 kW) at 1800 rpm. Max. torque: 1,276 ft./lbs. (1730 Nm) at 1080 rpm.
Engine emission: EURO II/EUROMOT/EPA/CARB (off highway).
Fuel Tank Capacity: 95 gallons. (360 L).

Transmission
Allison automatic MD 3066 P, 6 forward and 1 reverse speed. Transfer case with 2 speeds, inter-axle differential lock and integrated central power take-off for the second axle line.

Drive/Steer
6 x 4 x 6

Axles
1st axle line - steer.
2nd axle line - drive/steer.
3rd axle line - drive/steer.
Drive axles with planetary hub reduction and center mounted gearing

Suspension
GMK3050 features the Grove exclusive MEGATRAK† suspension. This revolutionary design features an independent hydroneumatic system with hydraulic lockout acting on all wheels. The suspension can be raised 6-1/2” (170 mm) or lowered 5” (130 mm) both longitudinally and transversely and features an automatic leveling system for on-highway travel.

Tires
6 tires, 20.5 R25.

Steering
Dual circuit, Servocom power steering with emergency steering pump. Axles 1 and 2 steer on highway. Separate steering of the 3rd axle line for all-wheel steering and crab-steer is controlled by an electric rocker switch.

Brakes
Service brake: pneumatic dual circuit acting on all wheels, air dryer. Permanent brake: exhaust brake and constant throttle brake is standard.
Parking brake: pneumatically operated spring-loaded, acting on 2nd and 3rd axle lines.

Cab
Aluminum, two-man design, safety glass, driver’s seat with hydraulic suspension, engine-dependent hot water heater. Complete instrumentation and driving controls. Cab can be tilted forward by 60° for easy access to engine, transmission, hydraulic pumps, heater and batteries.

Electrical system
24 V system with three-phase alternator 28 V/100 A, 2 batteries 12 V/170 Ah.

Maximum Speed
53 mph (85 km/h) with 20.5 R25 Tires

Gradeability (theoretical)
52% with 20.5 R25 Tires

Miscellaneous standard equipment
Additional hydraulic oil cooler; spare tire and wheel - 20.5 R25 with carry bracket; flashing amber warning light on carrier cab; working light; tool kit; fire extinguisher; rooster sheave; radio cassette in carrier cab.

* Optional equipment
* 6 x 6 x 6
* Electric driveline retarder
* 16.00 R25 tires (vehicle width 9 ft. [2.75 m])
* 14.00 R25 tires (vehicle width 8 ft. 2 in. [2.50 m])
* Engine-independent hot water heater, with engine pre-heater
* Trailing boom kit (less dolly)
* Air conditioning

*** Denotes optional equipment**
† “G MEGATRAK” (and design) is a trademark of Grove U.S. L.L.C.

(909) 222-0202 www.reliablecraneservice.com 260 North Smith Ave. Corona, CA 92880

32 - 125 ft. (9.8 - 38.1 m) | 23,150 lbs. (10,500 kg) | 100% 20'4" Spread | 360°

Pounds

Feet	32	44	55	67	79	90	102	113	125
10	*110,000								
10	108,000	67,000	67,000	38,800	38,800	36,400			
15	81,000	61,000	67,000	38,800	38,800	36,400	26,600	20,600	
20	61,000	50,000	56,000	38,800	38,800	36,400	26,600	20,600	17,400
25		42,000	43,800	38,800	37,600	34,600	26,400	20,600	17,400
30		35,200	36,400	33,000	32,800	30,000	24,600	20,400	17,400
35			28,200	26,200	26,200	26,000	22,400	20,200	17,400
40			22,600	23,200	21,000	21,400	20,400	20,000	17,200
45			18,600	19,200	17,000	17,600	17,800	17,800	16,800
50				16,200	14,600	16,000	15,000	15,200	15,200
55					13,600	14,400	13,400	13,000	13,000
60					12,000	12,400	12,400	11,000	11,200
65					10,400	10,600	10,800	9,200	9,600
70						9,200	9,400	7,800	8,200
75						8,000	8,200	6,600	7,000
80							7,200	5,600	6,000
85							6,400	4,800	5,000
90							5,600	4,000	4,200
95								3,400	3,600
100									3,000
105									2,400
110									2,000

%									
T1	0	50/0	100/0	100/0	100/0	100/0	100/0	100	100
T2	0	0/17	0/33	17/50	33/67	50/83	67/100	83	100
T3	0	0/17	0/33	17/50	33/67	50/83	67/100	83	100
T4	0	0/17	0/33	17/50	33/67	50/83	67/100	83	100

* Over rear only.
Lifting capacities greater than 97,000 lbs (44,000 kg) require additional equipment.
NOTE: Above loadchart also available with 50% outriggers.

32 - 125 ft. (9.8 - 38.1 m) | 15,400 lbs. (7,000 kg) | 100% 20'4" Spread | 360°

Pounds

Feet	32	44	55	67	79	90	102	113	125
10	*110,000								
10	108,000	67,000	67,000	38,800	38,800	36,400			
15	81,000	61,000	67,000	38,800	38,800	36,400	26,600	20,600	
20	58,000	50,000	52,000	38,800	38,800	36,400	26,600	20,600	17,400
25		38,800	38,800	36,400	35,800	34,600	26,400	20,600	17,400
30		30,000	31,200	29,200	27,400	27,000	24,600	20,400	17,400
35			24,000	24,600	21,600	21,600	21,400	20,200	17,400
40			19,200	19,600	17,400	19,400	17,600	17,200	17,000
45			15,400	16,000	16,000	16,800	16,000	14,400	14,200
50				13,200	13,600	14,000	14,200	12,000	12,000
55					11,400	11,800	12,000	10,200	10,200
60					9,600	10,000	10,200	8,400	8,600
65					8,000	8,400	8,600	7,000	7,200
70						7,200	7,400	5,800	6,000
75						6,200	6,400	4,800	5,000
80							5,400	3,800	4,200
85							4,600	3,200	3,400
90							4,000	2,400	2,800
95								1,800	2,200
100									1,600

%									
T1	0	50/0	100/0	100/0	100/0	100/0	100/0	100	100
T2	0	0/17	0/33	17/50	33/67	50/83	67/100	83	100
T3	0	0/17	0/33	17/50	33/67	50/83	67/100	83	100
T4	0	0/17	0/33	17/50	33/67	50/83	67/100	83	100

* Over rear only.
Lifting capacities greater than 97,000 lbs (44,000 kg) require additional equipment.
NOTE: Above loadchart also available with 50% outriggers.

THIS CHART IS ONLY A GUIDE AND SHOULD NOT BE USED TO OPERATE THE CRANE. The individual crane's load chart, operating instructions and other instructional plates must be read and understood prior to operating the crane.

(909) 222-0202 www.reliablecraneservice.com 260 North Smith Ave. Corona, CA 92880

32 - 125 ft. (9.8 - 38.1 m)	12,500 lbs. (5,700 kg)	100% 20'4" Spread	360°

Pounds

Feet	32	44	55	67	79	90	102	113	125
10	*110,000								
10	108,000	67,000	67,000	38,800	38,800	36,400			
15	80,000	61,000	67,000	38,800	38,800	36,400	26,600	20,600	
20	57,000	50,000	48,000	38,800	38,800	36,400	26,600	20,600	17,400
25		38,800	38,800	34,000	33,400	32,600	26,400	20,600	17,400
30		28,200	29,200	29,200	25,400	25,000	24,600	20,400	17,400
35			22,400	23,000	19,800	21,200	19,800	19,400	17,400
40			17,600	18,200	17,400	18,800	17,600	15,800	15,600
45			14,200	14,800	15,200	15,400	15,600	13,000	13,000
50				12,000	12,400	12,800	13,000	10,800	10,800
55					10,400	10,600	10,800	9,000	9,000
60					8,600	9,000	9,200	7,600	7,600
65					7,200	7,600	7,800	6,200	6,400
70						6,400	6,600	5,000	5,400
75						5,400	5,600	4,000	4,400
80							4,800	3,200	3,600
85							4,000	2,600	2,800
90							3,400	1,800	2,200
95									1,600

T1 T2 T3 T4 %									
T1	0	50/0	100/0	100/0	100/0	100/0	100/0	100	100
T2	0	0/17	0/33	17/50	33/67	50/83	67/100	83	100
T3	0	0/17	0/33	17/50	33/67	50/83	67/100	83	100
T4	0	0/17	0/33	17/50	33/67	50/83	67/100	83	100

* Over rear only.
Lifting capacities greater than 97,000 lbs (44,000 kg) require additional equipment.
NOTE: Above loadchart also available with 50% outriggers.

THIS CHART IS ONLY A GUIDE AND SHOULD NOT BE USED TO OPERATE THE CRANE. The individual crane's load chart, operating instructions and other instructional plates must be read and understood prior to operating the crane.

(909) 222-0202 www.reliablecraneservice.com 260 North Smith Ave. Corona, CA 92880

FIXED LATTICE EXTENSION

102 - 125 ft. (31 - 38.1 m)	28 - 49 ft. (8.7 - 15 m)	23,100 lbs. (10,500 kg)	100% 20'4" Spread	360°

Pounds

Feet	102 FT MAIN BOOM 5°	28 FT 20°	28 FT 40°	49 FT 5°	49 FT 20°	49 FT 40°	125 FT MAIN BOOM 5°	28 FT 20°	28 FT 40°	49 FT 5°	49 FT 20°	49 FT 40°
20	10,000											
25	10,600			6,000								
30	10,600	10,600		6,600			8,400					
35	10,600	10,200	8,400	6,600			8,400			5,400		
40	10,600	9,800	8,200	6,400	5,800		8,400	8,400		5,400		
45	10,600	9,400	8,000	6,400	5,600		8,400	8,400	7,800	5,400		
50	10,200	9,000	7,800	6,400	5,400	4,400	8,400	8,400	7,800	5,400	5,200	
55	9,600	8,800	7,600	6,200	5,200	4,200	8,400	8,400	7,600	5,400	5,200	
60	9,200	8,400	7,400	5,800	5,000	4,200	8,400	8,400	7,400	5,400	5,000	4,200
65	8,600	8,200	7,400	5,600	4,800	4,000	8,400	8,400	7,400	5,400	4,800	4,000
70	8,200	7,800	7,200	5,400	4,600	4,000	8,400	8,200	7,200	5,400	4,600	4,000
75	7,800	7,600	7,200	5,200	4,400	3,800	7,400	7,800	7,200	5,400	4,600	4,000
80	7,400	7,200	7,000	5,000	4,400	3,800	6,400	6,800	7,200	5,200	4,400	3,800
85	6,800	7,000	6,800	4,800	4,200	3,800	5,600	5,800	6,200	5,000	4,400	3,800
90	6,000	6,200	6,400	4,600	4,200	3,800	4,800	5,000	5,200	4,800	4,200	3,800
95	5,400	5,400	5,600	4,600	4,000	3,600	4,000	4,200	4,400	4,800	4,200	3,600
100	4,600	4,800		4,200	4,000	3,600	3,400	3,600	3,800	4,000	4,000	3,600
105	4,000	4,200		4,200	3,800	3,600	2,800	3,000	3,200	3,600	4,000	3,600
110	3,600	3,600		4,000	3,800	3,600	2,200	2,400	2,600	3,000	3,400	3,600
115	3,200			3,800	3,600	3,600	1,800	2,000		2,600	3,000	3,200
120				3,400	3,600					2,200	2,400	2,800
125				3,000	3,200						2,000	2,200
130				2,600	2,600						1,600	1,800
135				2,200								

%	102 FT MAIN BOOM	125 FT MAIN BOOM
T1	0/100	100
T2	100/67	100
T3	100/67	100
T4	100/67	100

LATTICE EXTENSION (LUFFING)

102 - 125 ft. (31 - 38.1 m)	28 - 49 ft. (8.7 - 15 m)	23,100 lbs. (10,500 kg)	100% 20'4" Spread	360°

Pounds

Feet	102 FT MAIN BOOM 28 FT *5° - 20°	28 FT *20° - 40°	49 FT *5° - 20°	49 FT *20° - 40°	125 FT MAIN BOOM 28 FT *5° - 20°	28 FT *20° - 40°	49 FT *5° - 20°	49 FT *20° - 40°
30	5,600							
35	5,200	4,200						
40	5,000	4,000	2,800		5,200			
45	4,600	4,000	2,600		5,000	4,000		
50	4,400	3,800	2,400	2,000	4,800	4,000	2,600	
55	4,200	3,800	2,400	2,000	4,600	3,800	2,600	
60	4,000	3,600	2,200	1,800	4,400	3,800	2,400	2,000
65	3,800	3,600	2,000	1,800	4,200	3,800	2,200	1,800
70	3,800	3,600	2,000	1,800	4,000	3,600	2,200	1,800
75	3,600	3,400	1,800	1,600	4,000	3,600	2,000	1,800
80	3,400	3,400	1,800	1,600	3,800	3,600	2,000	1,800
85	3,400	3,400	1,800	1,600	3,600	3,400	1,800	1,600
90	3,200	3,200	1,600	1,600	3,600	3,400	1,800	1,600
95	3,200	3,200	1,600	1,600	3,400	3,400	1,800	1,600
100	3,000		1,600	1,400	3,000	3,200	1,600	1,600
105	3,000		1,400	1,400	2,600	2,800	1,600	1,600
110	2,800		1,400	1,400	2,000	2,200	1,600	1,400
115			1,400	1,400	1,600		1,600	1,400
120							1,400	1,400
125								1,400
130								1,400

%	102 FT MAIN BOOM	125 FT MAIN BOOM
T1	0/100	100
T2	100/67	100
T3	100/67	100
T4	100/67	100

* Luffing under load.

THIS CHART IS ONLY A GUIDE AND SHOULD NOT BE USED TO OPERATE THE CRANE. The individual crane's load chart, operating instructions and other instructional plates must be read and understood prior to operating the crane.

(909) 222-0202 www.reliablecraneservice.com 260 North Smith Ave. Corona, CA 92880

FIXED LATTICE EXTENSION

102 - 125 ft. (31 - 38.1 m)	28 - 49 ft. (8.7 - 15 m)	15,400 lbs. (7,000 kg)	100% 20'4" Spread	360°

Pounds

	102 FT MAIN BOOM						125 FT MAIN BOOM					
		28 FT			49 FT			28 FT			49 FT	
Feet	5°	20°	40°	5°	20°	40°	5°	20°	40°	5°	20°	40°
20	10,000											
25	10,600			6,000								
30	10,600	10,600		6,600			8,400					
35	10,600	10,200	8,400	6,600			8,400			5,400		
40	10,600	9,800	8,200	6,400	5,800		8,400	8,400		5,400		
45	10,600	9,400	8,000	6,400	5,600		8,400	8,400	7,800	5,400		
50	10,200	9,000	7,800	6,400	5,400	4,400	8,400	8,400	7,800	5,400	5,200	
55	9,600	8,800	7,600	6,200	5,200	4,200	8,400	8,400	7,600	5,400	5,200	
60	9,200	8,400	7,400	5,800	5,000	4,200	8,400	8,400	7,400	5,400	5,000	4,200
65	8,600	8,200	7,400	5,600	4,800	4,000	7,400	8,000	7,400	5,400	4,800	4,000
70	8,000	7,800	7,200	5,400	4,600	4,000	6,200	6,800	7,200	5,400	4,600	4,000
75	7,000	7,200	7,200	5,200	4,400	3,800	5,400	5,800	6,200	5,400	4,600	4,000
80	6,000	6,200	6,600	5,000	4,400	3,800	4,400	4,800	5,200	5,000	4,400	3,800
85	5,200	5,400	5,600	4,800	4,200	3,800	3,800	4,200	4,400	4,400	4,400	3,800
90	4,400	4,600	4,800	4,600	4,200	3,800	3,000	3,400	3,800	3,800	4,200	3,800
95	3,800	4,000	4,200	4,400	4,000	3,600	2,600	2,800	3,000	3,200	3,800	3,600
100	3,200	3,400		4,000	3,800	3,600	2,000	2,200	2,400	2,600	3,200	3,600
105	2,800	2,800		3,400	3,800	3,600	1,400	1,800	1,800	2,200	2,600	3,200
110	2,400	2,400		3,000	3,200	3,600			1,400	1,800	2,200	2,600
115	2,000			2,600	2,800	3,000				1,400	1,800	2,000
120				2,200	2,400						1,400	1,600
125				1,800	2,000							
130				1,600	1,600							

%		
T1	0/100	100
T2	100/67	100
T3	100/67	100
T4	100/67	100

LATTICE EXTENSION (LUFFING)

102 - 125 ft. (31 - 38.1 m)	28 - 49 ft. (8.7 - 15 m)	15,400 lbs. (7,000 kg)	100% 20'4" Spread	360°

Pounds

	102 FT MAIN BOOM				125 FT MAIN BOOM			
	28 FT		49 FT		28 FT		49 FT	
Feet	*5° - 20°	*20° - 40°	*5° - 20°	*20° - 40°	*5° - 20°	*20° - 40°	*5° - 20°	*20° - 40°
30	5,600							
35	5,200	4,200						
40	5,000	4,000	2,800		5,200			
45	4,600	4,000	2,600		5,000	4,000		
50	4,400	3,800	2,400	2,000	4,800	4,000	2,600	
55	4,200	3,800	2,400	2,000	4,600	3,800	2,600	
60	4,000	3,600	2,200	1,800	4,400	3,800	2,400	2,000
65	3,800	3,600	2,000	1,800	4,200	3,800	2,200	1,800
70	3,800	3,600	2,000	1,800	4,000	3,600	2,200	1,800
75	3,600	3,400	1,800	1,600	4,000	3,600	2,000	1,800
80	3,400	3,400	1,800	1,600	3,800	3,600	2,000	1,800
85	3,400	3,400	1,800	1,600	3,400	3,400	1,800	1,600
90	3,200	3,200	1,600	1,600	2,800	3,200	1,800	1,600
95	3,200	3,200	1,600	1,600	2,200	2,600	1,800	1,600
100	3,000		1,600	1,400	1,800	2,000	1,600	1,600
105	2,600		1,400	1,400	1,400	1,600	1,600	1,600
110	2,200		1,400	1,400			1,600	1,400
115			1,400	1,400				1,400

%		
T1	0/100	100
T2	100/67	100
T3	100/67	100
T4	100/67	100

* Luffing under load.

THIS CHART IS ONLY A GUIDE AND SHOULD NOT BE USED TO OPERATE THE CRANE. The individual crane's load chart, operating instructions and other instructional plates must be read and understood prior to operating the crane.

FIXED LATTICE EXTENSION

102 - 125 ft. (31 - 38.1 m)	28 - 49 ft. (8.7 - 15 m)	12,500 lbs. (5,700 kg)	100% 20'4" Spread	360°

Pounds

	102 FT MAIN BOOM						125 FT MAIN BOOM					
		28 FT			49 FT			28 FT			49 FT	
Feet	5°	20°	40°	5°	20°	40°	5°	20°	40°	5°	20°	40°
20	10,000											
25	10,600			6,000								
30	10,600	10,600		6,600			8,400					
35	10,600	10,200	8,400	6,600			8,400			5,400		
40	10,600	9,800	8,200	6,400	5,800		8,400	8,400		5,400		
45	10,600	9,400	8,000	6,400	5,600		8,400	8,400	7,800	5,400		
50	10,200	9,000	7,800	6,400	5,400	4,400	8,400	8,400	7,800	5,400	5,200	
55	9,600	8,800	7,600	6,200	5,200	4,200	8,400	8,400	7,600	5,400	5,200	
60	9,200	8,400	7,400	5,800	5,000	4,200	7,600	8,200	7,400	5,400	5,000	4,200
65	8,400	8,200	7,400	5,600	4,800	4,000	6,400	7,000	7,400	5,400	4,800	4,000
70	7,200	7,600	7,200	5,400	4,600	4,000	5,400	6,000	6,400	5,400	4,600	4,000
75	6,200	6,600	6,800	5,200	4,400	3,800	4,600	5,000	5,400	5,200	4,600	4,000
80	5,400	5,600	5,800	5,000	4,400	3,800	3,800	4,200	4,600	4,400	4,400	3,800
85	4,600	4,800	5,000	4,800	4,200	3,800	3,000	3,400	3,800	3,600	4,400	3,800
90	3,800	4,000	4,200	4,600	4,000	3,800	2,400	2,800	3,000	3,000	3,800	3,800
95	3,200	3,400	3,600	4,000	4,000	3,600	1,800	2,200	2,400	2,600	3,200	3,600
100	2,800	3,000		3,400	3,800	3,600	1,400	1,600	1,800	2,000	2,600	3,200
105	2,200	2,400		3,000	3,200	3,600			1,400	1,600	2,000	2,600
110	1,800	2,000		2,600	2,800	3,000					1,600	2,000
115	1,400			2,200	2,400	2,600						1,600
120				1,800	2,000							
125				1,400	1,600							

%	102 FT MAIN BOOM	125 FT MAIN BOOM
T1	0/100	100
T2	100/67	100
T3	100/67	100
T4	100/67	100

LATTICE EXTENSION (LUFFING)

102 - 125 ft. (31 - 38.1 m)	28 - 49 ft. (8.7 - 15 m)	12,500 lbs. (5,700 kg)	100% 20'4" Spread	360°

Pounds

	102 FT MAIN BOOM				125 FT MAIN BOOM			
	28 FT		49 FT		28 FT		49 FT	
Feet	*5° - 20°	*20° - 40°	*5° - 20°	*20° - 40°	*5° - 20°	*20° - 40°	*5° - 20°	*20° - 40°
30	5,600							
35	5,200	4,200						
40	5,000	4,000	2,800		5,200			
45	4,600	4,000	2,600		5,000	4,000		
50	4,400	3,800	2,400	2,000	4,800	4,000	2,600	
55	4,200	3,800	2,400	2,000	4,600	3,800	2,600	
60	4,000	3,600	2,200	1,800	4,400	3,800	2,400	2,000
65	3,800	3,600	2,000	1,800	4,200	3,800	2,200	1,800
70	3,800	3,600	2,000	1,800	4,000	3,600	2,200	1,800
75	3,600	3,400	1,800	1,600	4,000	3,600	2,000	1,800
80	3,400	3,400	1,800	1,600	3,400	3,600	2,000	1,800
85	3,400	3,400	1,800	1,600	2,800	3,200	1,800	1,600
90	3,200	3,200	1,600	1,600	2,200	2,600	1,800	1,600
95	3,000	3,200	1,600	1,600	1,800	2,000	1,800	1,600
100	2,600		1,600	1,400		1,600	1,600	1,600
105	2,000		1,400	1,400			1,400	1,600
110	1,800		1,400	1,400				1,400
115			1,400	1,400				

%	102 FT MAIN BOOM	125 FT MAIN BOOM
T1	0/100	100
T2	100/67	100
T3	100/67	100
T4	100/67	100

* Luffing under load.

THIS CHART IS ONLY A GUIDE AND SHOULD NOT BE USED TO OPERATE THE CRANE. The individual crane's load chart, operating instructions and other instructional plates must be read and understood prior to operating the crane.

(909) 222-0202 www.reliablecraneservice.com 260 North Smith Ave. Corona, CA 92880

32 - 55 ft.
(9.8 - 13.4 m)

23,100 lbs.
(10,500 kg)

Over Rear

Feet	32 - 44 FT	44 - 55 FT
	Pounds	
10	25,400	26,400
15	17,400	18,400
20	12,200	13,200
25	8,800	9,800
30	6,200	7,400
35		5,400
40		4,000
45		2,600
T1	0	0
T2	0/17	17/33
T3	0/17	17/33
T4	0/17	17/33

* Over rear only.

32 - 55 ft.
(9.8 - 13.4 m)

15,400 lbs.
(7,000 kg)

Over Rear

Feet	32 - 44 FT	44 - 55 FT
	Pounds	
10	24,200	25,200
15	16,400	17,600
20	11,400	12,600
25	8,200	9,200
30	5,600	6,800
35		5,000
40		3,600
45		2,400
T1	0	0
T2	0/17	17/33
T3	0/17	17/33
T4	0/17	17/33

* Over rear only.

32 - 55 ft.
(9.8 - 13.4 m)

12,500 lbs.
(5,700 kg)

Over Rear

Feet	32 - 44 FT	44 - 55 FT
	Pounds	
10	23,800	24,800
15	16,200	17,200
20	11,200	12,400
25	8,000	9,000
30	5,400	6,600
35		4,800
40		3,400
45		2,200
T1	0	0
T2	0/17	17/33
T3	0/17	17/33
T4	0/17	17/33

* Over rear only.

THIS CHART IS ONLY A GUIDE AND SHOULD NOT BE USED TO OPERATE THE CRANE. The individual crane's load chart, operating instructions and other instructional plates must be read and understood prior to operating the crane.

Rated Lifting Capacities

IMPORTANT NOTES:

WARNING: THIS CHART IS ONLY A GUIDE. The notes below are for illustration only and should not be relied upon to operate the crane. The individual crane's load chart, operating instructions and other instruction plates must be read and understood prior to operating the crane.

1. All rated loads meet ANSI/ASME B30.5, Mobile and Locomotive Cranes. Testing and development were performed to SAEJ1063, Cantilevered Boom Crane Structures - Method of Test and SAEJ765 Crane Stability Test Code.

2. Capacities given do not include the weight of hook blocks, slings, auxiliary lifting equipment and load handling devices. Their weights must be added to the load to be lifted. When more than minimum required reeving is used, the additional rope weight shall be considered part of the load.

3. The machine shall be leveled on a firm supporting surface. Depending on the nature of the supporting surface, it may be necessary to have structural supports under the outrigger floats to spread the load to a larger bearing surface.

4. When either boom length or radius or both are between values listed, the smallest load shown at either the next larger radius or next longer or shorter boom length shall be used.

5. For outrigger operation, outriggers shall be properly extended with tires raised off the ground before operating the boom or lifting loads.

Symbols Glossary

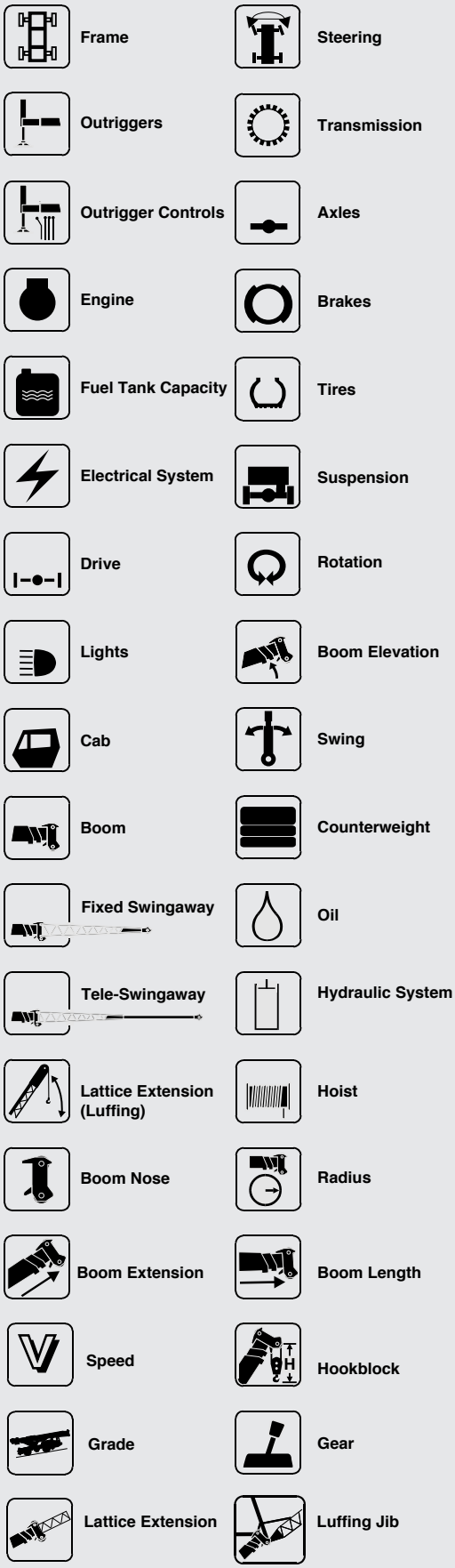

GMK3050

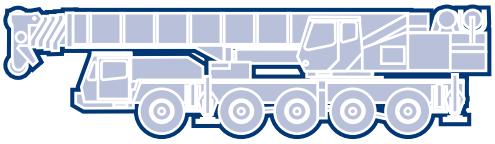

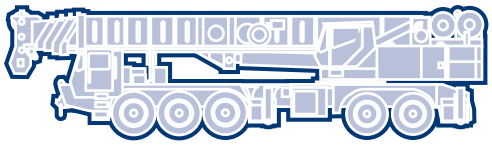

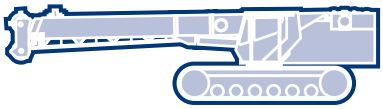

GROVE® worldwide

Grove Worldwide –
World Headquarters
Grove U.S. L.L.C.
1565 Buchanan Trail East
P.O. Box 21
Shady Grove, Pennsylvania 17256, U.S.A.
Tel: [Int + 1] (717) 597-8121
Fax: [Int + 1] (717) 597-4062
Western Hemisphere

Grove Europe Limited*
Sunderland SR4 6TT, England
Tel: [Int + 44] 191 565-6281
Fax: [Int + 44] 191 564-0442
Europe, Africa, Middle East, Asia/Pacific

Grove Europe Limited*
Telford Road, Bicester
Oxfordshire, OX6 0TZ
Tel: [Int + 44] 1869 878-890
Fax: [Int + 44] 1869 878-891
*Grove Europe Limited, Registered in England, Number 1845128, Registered office, Crown Works, Pallion, Sunderland, Tyne & Wear, England SR4 6TT

Deutsche Grove GmbH
Sales and Service
Helmholtzstrasse 12, Postfach 5026
D-40750 Langenfeld, Germany
Tel: [Int + 49] (2173) 8909-0
Fax: [Int + 49] (2173) 8909-30

Wilhelmshaven Works
Industriegelande West, Postfach 1853
D-26358 Wilhelmshaven, Germany
Tel: [Int + 49] (4421) 294-0
Fax: [Int + 49] (4421) 294-301

Grove France S.A.
16, chaussée Jules-César, 95520 OSNY
B.P. 203, 95523 CERGY PONTOISE CEDEX
France
Tel: [Int + 33] (1) 30313150
Int: [Int + 33] (1) 30386085

Grove Asia/Pacific - Regional Office
171 Chin Swee Road
San Centre
Singapore 0316
Tel: [Int + 65] 536-6112
Fax: [Int + 65] 536-6119
Asia/Pacific, Near East

Grove China - Representative Office
Room 713, Towercrest Plaza
No. 3 Mai Zi Dian West Road
Chao Yang District
Beijing, China 100016
Tel: [Int + 86] (10) 64 67 16 90
Fax: [Int + 86] (10) 64 67 16 91

Grove Product Support
Western Hemisphere
1086 Wayne Avenue
Chambersburg, Pennsylvania USA
Tel: [Int + 1] (717) 263-5100
Fax: [Int + 1] (717) 267-0404

Europe, Africa, Middle East, Asia/Pacific
Sunderland SR4 6TT, England
Tel: [Int + 44] 191 565-6281
Parts Fax: [Int + 44] 191 510-9242
Service Fax: [Int + 44] 191 510-9560

http://www.groveworldwide.com

Bigge Crane and Rigging Co.
10700 Bigge Avenue
San Leandro, CA 94577
Phone: (888) 337-BIGGE or (510) 638-8100
Fax: (510) 639-4053
Email: info@bigge.com
Web site: www.bigge.com

Constant improvement and engineering progress make it necessary that we reserve the right to make specification, equipment, and price changes without notice. Illustrations shown may include optional equipment and accessories and may not include all standard equipment.

Distributed By:

MEGATRAK™

Form No.: GMK3050 Part No.: 3-1309 799-10M Printed in U.S.A.