TEREX DEMAG

AC 500-1

600t

HIGHLIGHTS

Demag AC 500-1

- Enhanced Demag ovaloid boom design ensures excellent lifting capacities
- Exceptional capacity enhancements due to new Sideways Superlift
- The shortest 8-axle crane with a carrier length of just 56.3 ft
- Star-type outriggers giving enhanced stability
- Short rigging time and optimal transport weights for all configurations
- Innovative crane control provides high operating comfort

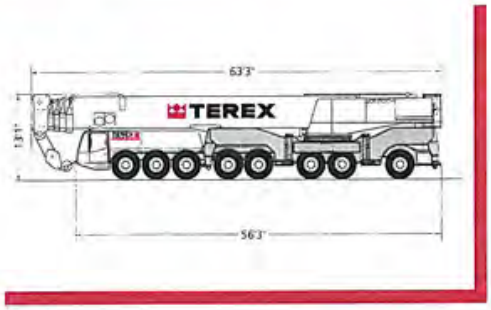

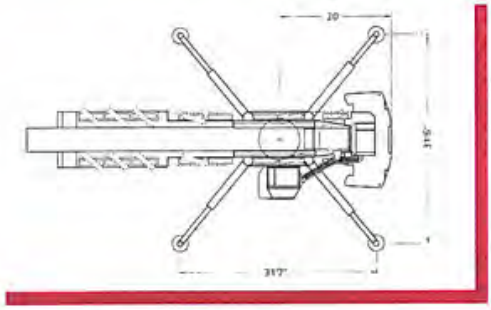

www.

Contents

Page:

Specifications
Dimensions 4
Specifications 6

Main boom
Working ranges 7
Lifting capacities 8
Lifting capacities with SSL 0° 11

Main boom extension
Working ranges 13
Lifting capacities 14
Lifting capacities with SSL 0° + 30° 15

Fixed fly jib
Working ranges 16
Lifting capacities 17
Lifting capacities with SSL 0° + 30° 19
Working ranges 20

Luffing fly jib
Working ranges 21
Lifting capacities 22
Working ranges with SSL 0° + 60° 31
Lifting capacities with SSL 0° + 60° 32

Technical description
Carrier · Superstructure · Optional equipment 39

Overview
Standard duty charts 40

Dimensions

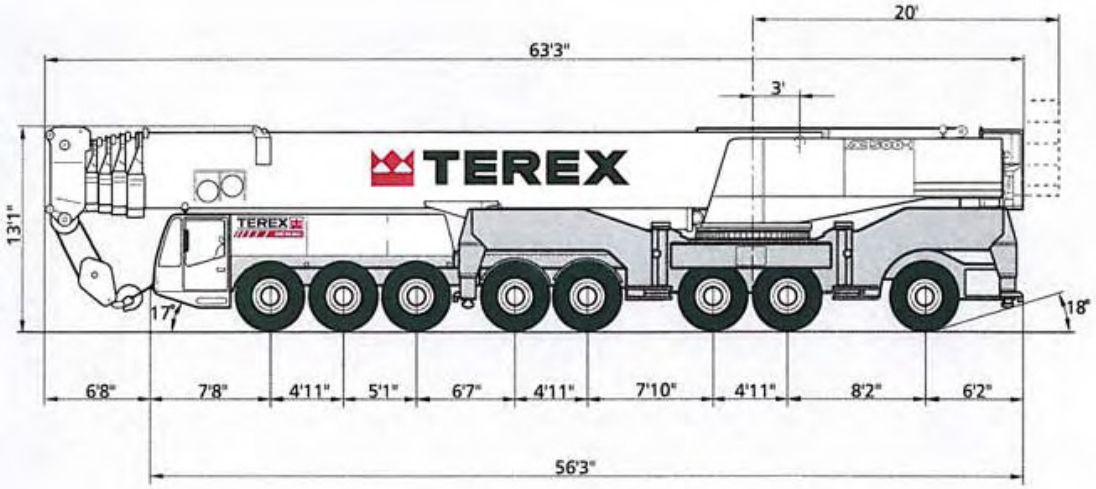

1

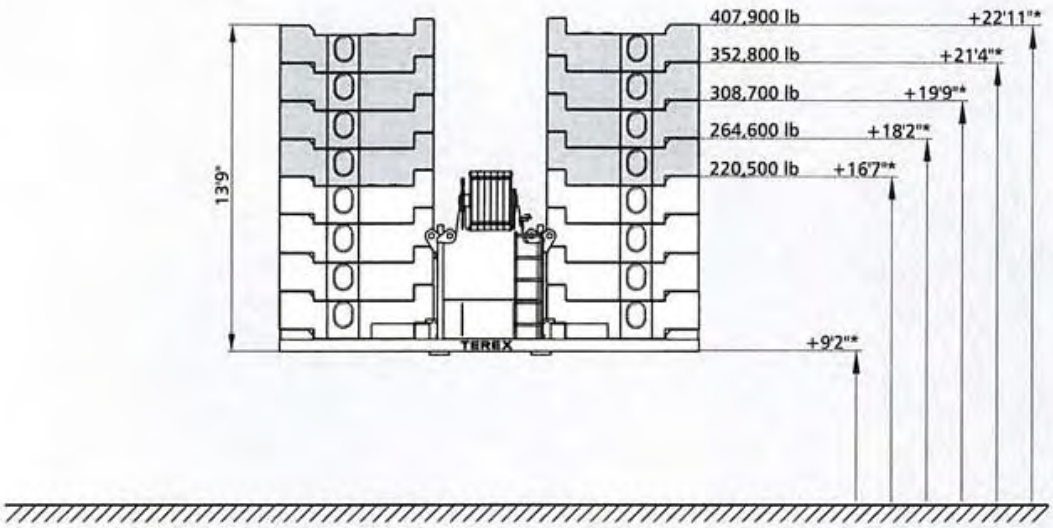

* Tail swing above ground

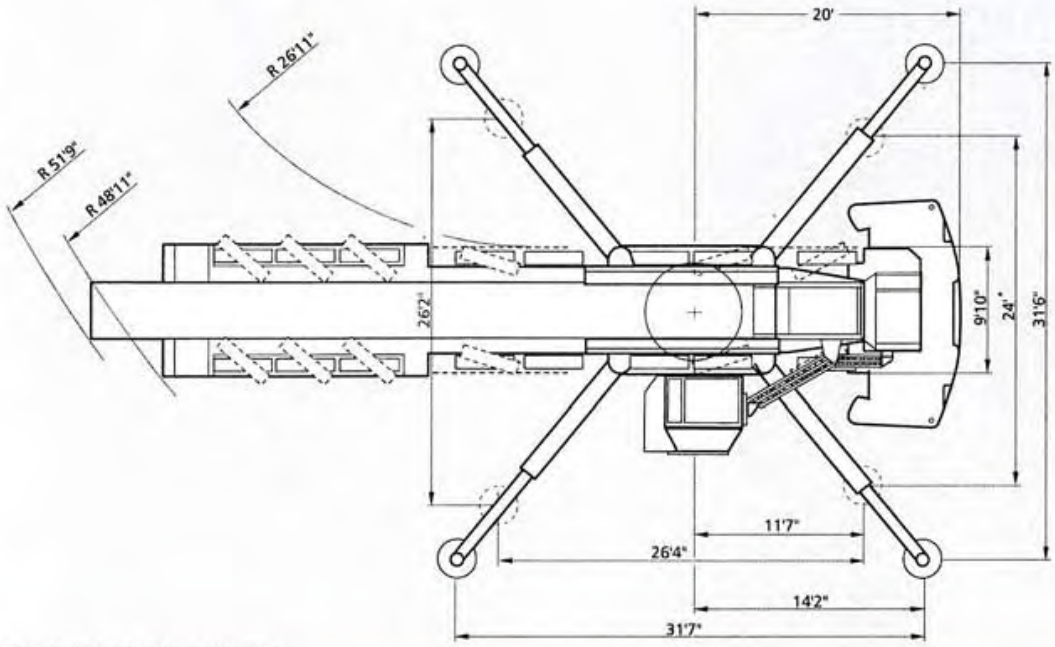

*) Duties with reduced outrigger base on request

Specifications

Axle loads and weights

Crane with main boom, outriggers and hook block	
Axles	8 x 26,500 lb
Total weight	212,000 lb

Working speeds (infinitely variable)

Mechanisms	Line speed	Max. permissible line pull	Rope length
Hoist I	max. 446.2 ft/min	28,100 lb	1,548 ft
Hoist II	max. 505.2 ft/min	28,100 lb	2,362 ft
Slewing			max. 0.8 rpm
Telescoping speed			48.2 – 183.7 ft: approx. 420 sec.
Boom elevation			-0,5° – +83°: 85 sec.

Carrier performance

Travel speed	0 . . 40 mph

Hook block / Heavy-lift attachment

Type	Possible load	Number of sheaves	Weight	„D"	max. reeving	Heavy-lift attachment
320	566,600 lb	11	7,100 lb	13 ft	23	4 add. sheaves
250	476,200 lb	9	5,700 lb	13 ft	18	2 add. sheaves
200	397,000 lb	7	5,100 lb	10 ft	15	
160	291,000 lb	5	4,200 lb	10 ft	11	
100	185,200 lb	3	4,000 lb	10 ft	7	
40	79,400 lb	1	1,700 lb	9 ft	3	
12.5	26,500 lb	Single line hook	1,100 lb	7 ft	1	

Working ranges main boom

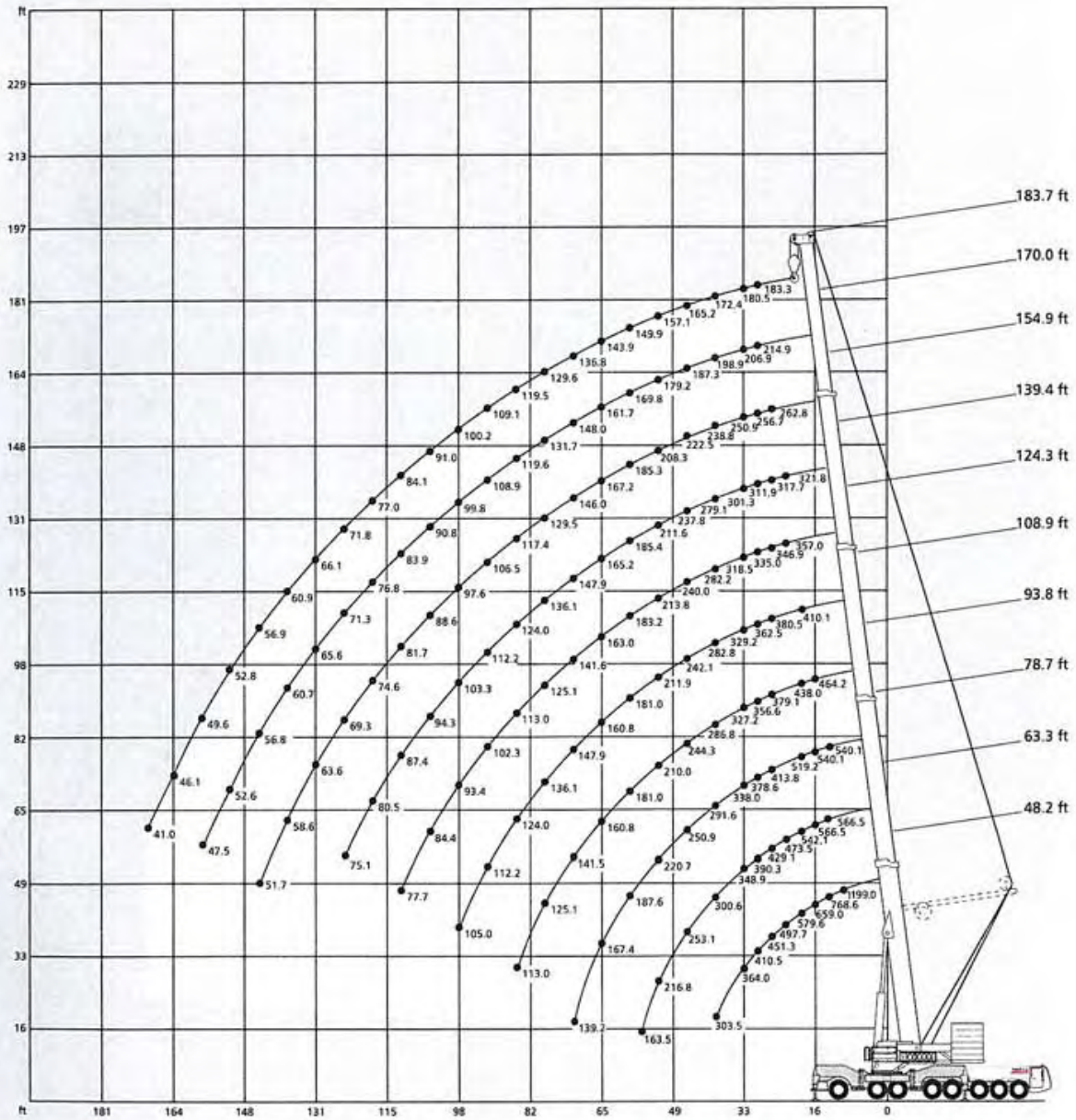

AC 500-1

Lifting capacities main boom

352,800 lb 360° **85 %**

Main boom

Radius ft	ft 48.2[3]	48.2	63.3[3]	63.3	78.7[3]	78.7	93.8	108.9	124.3	139.4	154.9	170.0	183.7	Radius ft
							1,000 lb							
10	1199.0[1]	566.5	-	-	-	-	-	-	-	-	-	-	-	10
11	917.2[2]	566.5	566.5	566.5	-	-	-	-	-	-	-	-	-	11
13	768.6[2]	566.5	566.5	566.5	540.1	540.1	-	-	-	-	-	-	-	13
15	691.2[2]	565.3	566.5	564.9	540.1	540.1	-	-	-	-	-	-	-	15
16	659.0[2]	559.9	566.5	558.2	540.1	540.1	464.2	-	-	-	-	-	-	16
19	579.6	507.1	542.1	506.7	519.2	503.5	438.0	370.5	-	-	-	-	-	19
23	497.7	442.7	473.5	442.7	460.2	440.4	405.3	343.6	312.8	-	-	-	-	23
26	451.3	404.4	429.1	404.4	413.8	402.1	379.1	323.5	296.7	259.1	-	-	-	26
29	410.5	369.8	390.3	371.6	378.6	369.4	356.6	307.0	278.7	244.9	211.5	182.1	-	29
33	364.0	333.6	348.9	333.6	338.0	331.4	327.2	285.6	259.1	228.5	195.6	171.5	145.1	33
39	303.5	289.3	300.6	289.3	291.6	287.1	286.8	255.4	228.9	206.4	177.4	157.4	135.1	39
46	-	-	253.1	244.3	250.9	242.1	244.3	224.6	200.3	184.9	158.5	140.9	123.3	46
52	-	-	216.8	212.1	220.7	207.8	210.0	200.4	178.2	166.8	144.4	128.8	113.2	52
59	-	-	159.2	163.5	187.6	178.8	181.0	176.5	158.8	150.0	132.3	116.9	103.4	59
65	-	-	-	-	167.4	158.6	160.8	160.3	146.7	137.9	122.2	109.6	95.8	65
72	-	-	-	-	135.3	139.2	141.5	143.7	132.6	123.8	110.5	100.5	87.7	72
79	-	-	-	-	-	-	125.1	127.4	120.8	112.1	102.6	92.5	80.6	79
85	-	-	-	-	-	-	113.0	117.3	110.7	104.6	95.5	86.5	75.4	85
92	-	-	-	-	-	-	-	106.0	101.6	95.9	88.5	80.1	70.0	92
98	-	-	-	-	-	-	-	97.8	94.2	89.5	83.2	75.3	65.9	98
105	-	-	-	-	-	-	-	-	86.8	83.3	78.0	70.5	61.9	105
111	-	-	-	-	-	-	-	-	79.9	78.0	73.8	66.5	58.3	111
118	-	-	-	-	-	-	-	-	-	72.6	69.7	62.8	54.7	118
124	-	-	-	-	-	-	-	-	-	67.3	66.1	59.6	51.7	124
131	-	-	-	-	-	-	-	-	-	58.5	62.2	56.5	48.8	131
138	-	-	-	-	-	-	-	-	-	-	57.8	53.4	45.7	138
144	-	-	-	-	-	-	-	-	-	-	52.9	51.0	43.7	144
151	-	-	-	-	-	-	-	-	-	-	-	48.4	41.2	151
157	-	-	-	-	-	-	-	-	-	-	-	46.2	39.3	157
164	-	-	-	-	-	-	-	-	-	-	-	-	37.4	164
170	-	-	-	-	-	-	-	-	-	-	-	-	-	170

Remarks

1) over rear, special attachment required, on request

2) over rear, heavy-lift attachment required

3) central jack leg

(909) 222-0202 www.reliablecraneservice.com 260 North Smith Ave. Corona, CA 92880

220,500 lb 360° **85 %**

Main boom

Radius ft	ft 48.2	63.3	78.7	93.8	108.9	124.3	139.4	154.9	170.0	183.7	Radius ft
					1,000 lb						
10	566.5	-	-	-	-	-	-	-	-	-	10
11	566.5	566.5	-	-	-	-	-	-	-	-	11
13	566.5	566.5	540.1	-	-	-	-	-	-	-	13
15	562.1	561.8	539.1	-	-	-	-	-	-	-	15
16	543.3	541.6	535.1	464.2	-	-	-	-	-	-	16
19	486.8	485.5	484.6	438.0	370.5	-	-	-	-	-	19
23	422.8	425.0	422.8	405.3	343.6	312.8	-	-	-	-	23
26	386.5	386.7	384.5	379.1	323.5	296.7	259.1	-	-	-	26
29	344.7	344.7	340.7	343.7	307.0	278.7	244.9	211.5	182.1	-	29
33	295.8	295.8	298.1	295.8	285.3	259.1	228.5	195.6	171.5	145.1	33
39	241.4	241.4	243.6	241.4	245.0	228.9	206.4	177.4	157.4	135.1	39
46	-	195.8	198.0	193.6	198.0	195.8	184.9	158.5	140.9	123.3	46
52	-	159.5	161.7	164.8	163.7	161.5	160.7	144.4	128.8	113.2	52
59	-	128.1	130.3	134.7	132.5	130.3	130.3	130.1	116.9	103.4	59
65	-	-	112.1	114.5	112.3	111.2	110.7	112.1	109.6	95.8	65
72	-	-	99.5	98.2	98.0	96.7	92.8	94.3	96.2	87.7	72
79	-	-	-	84.4	87.5	83.1	79.3	80.5	82.7	80.5	79
85	-	-	-	75.2	77.8	75.2	73.9	73.0	73.0	73.1	85
92	-	-	-	-	68.6	66.2	66.4	65.7	63.7	64.0	92
98	-	-	-	-	61.9	59.5	59.7	59.1	57.1	57.3	98
105	-	-	-	-	-	53.1	54.6	52.4	50.6	50.9	105
111	-	-	-	-	-	48.5	49.8	47.6	45.8	46.0	111
118	-	-	-	-	-	45.6	45.0	42.8	40.8	41.0	118
124	-	-	-	-	-	-	41.4	40.5**	37.0	37.2	124
131	-	-	-	-	-	-	37.6	37.7**	32.9	33.2	131
138	-	-	-	-	-	-	-	34.5**	29.4	29.6	138
144	-	-	-	-	-	-	-	29.0	26.8	26.8	144
151	-	-	-	-	-	-	-	-	24.0	24.0	151
157	-	-	-	-	-	-	-	-	21.9	21.7	157
164	-	-	-	-	-	-	-	-	-	19.6	164
170	-	-	-	-	-	-	-	-	-	-	170

Remarks

** Length of main boom 149.6 ft

2

Lifting capacities main boom

132,300 lb — 360° — 85 %

Main boom

Radius ft	ft 48.2	63.3	78.7	93.8	108.9	124.3	139.4	154.9	170.0	183.7	Radius ft
					1,000 lb						
10	566.5	-	-	-	-	-	-	-	-	-	10
11	566.5	566.5	-	-	-	-	-	-	-	-	11
13	566.5	566.5	540.1	-	-	-	-	-	-	-	13
15	550.4	548.2	536.9	-	-	-	-	-	-	-	15
16	528.9	526.7	523.5	464.2	-	-	-	-	-	-	16
19	471.4	473.2	471.0	438.0	370.5	-	-	-	-	-	19
23	391.8	391.8	394.0	391.8	343.6	312.8	-	-	-	-	23
26	339.4	339.4	341.6	339.4	323.5	296.7	259.1	-	-	-	26
29	298.1	298.1	300.3	298.1	292.2	271.3	244.9	211.5	182.1	-	29
33	244.6	244.6	249.0	244.6	242.6	227.6	216.7	195.2	171.5	145.1	33
39	172.0	174.1	180.6	181.9	178.1	175.2	170.4	165.0	157.4	135.1	39
46	-	129.7	131.9	131.9	134.2	129.8	125.3	127.5	127.6	123.2	46
52	-	104.8	106.5	107.5	109.0	107.0	107.5	105.2	103.4	103.2	52
59	-	83.2	84.6	88.1	86.8	87.4	86.3	86.7**	81.5	81.9	59
65	-	-	73.5	74.7	74.7	73.9	72.8	73.2**	68.1	68.6	65
72	-	-	61.8	62.4	62.9	61.5	60.4	60.9**	56.0	56.3	72
79	-	-	-	53.0	53.5	53.9*	51.0	51.5**	46.8	47.1	79
85	-	-	-	46.6	47.0	47.5*	44.6	45.0**	40.2	40.6	85
92	-	-	-	-	40.9	41.3*	38.4	38.9**	33.8	34.0	92
98	-	-	-	-	36.4	36.7*	33.8	34.2**	29.0	29.4	98
105	-	-	-	-	-	32.4*	29.0	29.5**	24.4	24.6	105
111	-	-	-	-	-	26.9	25.6	26.1**	21.0	21.2	111
118	-	-	-	-	-	23.6	22.3	22.5**	17.4	17.6	118
124	-	-	-	-	-	-	19.6	19.9**	15.0	15.0	124
131	-	-	-	-	-	-	17.2	17.2**	12.4	12.4	131
138	-	-	-	-	-	-	-	14.9**	10.0	10.0	138
144	-	-	-	-	-	-	-	10.4	8.2	8.2	144
151	-	-	-	-	-	-	-	-	6.3	6.3	151
157	-	-	-	-	-	-	-	-	5.1	4.9	157

0 lb — 360° — 85 %

Main boom

Radius ft	ft 48.2	63.3	78.7	93.8	108.9	124.3	139.4	149.6	170.0	183.7	Radius ft
					1,000 lb						
10	566.5	-	-	-	-	-	-	-	-	-	10
11	566.5	566.5	-	-	-	-	-	-	-	-	11
13	566.5	566.5	544.6	-	-	-	-	-	-	-	13
15	505.4	506.6	465.0	-	-	-	-	-	-	-	15
16	470.5	467.7	402.7	330.7	-	-	-	-	-	-	16
19	344.7	301.9	264.6	232.0	188.7	176.7	-	-	-	-	19
23	193.2	184.6	169.3	156.1	140.7	129.7	116.6	-	-	-	23
26	126.7	138.3	133.0	121.8	114.2	111.3*	95.4	91.1	-	-	26
29	88.8	100.2	105.6	100.0	94.3	92.2*	79.0	76.2	62.5	-	29
33	58.7	68.2	74.8	75.8	73.9	72.9*	62.7	60.7	49.5	47.1	33
39	35.6	43.4	48.9	49.8	50.6	51.1*	46.0	44.8	35.4	33.8	39
46	-	27.2	32.0	32.7	33.6	34.0*	30.9	31.4	23.2	21.9	46
52	-	18.9	23.2	24.0	24.7	25.2*	22.3	22.7	14.6	13.6	52
59	-	12.3	16.1	16.8	17.4	17.9*	15.0	15.2	7.5	6.6	59
65	-	-	11.9	12.5	13.0	13.4*	10.3	10.4	-	-	65
72	-	-	7.3	8.0	8.7	9.1*	5.8	6.0	-	-	72
79	-	-	-	4.5	5.1	5.6*	-	-	-	-	79

Remarks

* Length of main boom 115.8 ft

** Length of main boom 149.6 ft

(909) 222-0202 www.reliablecraneservice.com 260 North Smith Ave. Corona, CA 92880

Lifting capacities main boom with SSL 0°

220,500 lb 360° **85 %**

Main boom

Radius ft	ft	108.9	124.3	139.4	154.9	170.0	183.7	Radius ft
				1,000 lb				
19		410.1	-	-	-	-	-	19
23		396.5	357.0	321.8	-	-	-	23
26		372.3	346.9	317.7	262.8	-	-	26
29		333.3	331.3	311.9	256.7	214.9	183.3	29
33		284.8	287.1	289.3	250.8	206.9	180.5	33
39		230.4	234.7	236.9	236.7	198.9	172.4	39
46		187.2	189.2	191.4	193.7	187.1	165.2	46
52		173.1	161.0	171.0	167.5	169.0	157.1	52
59		147.9	136.8	145.7	141.3	143.5	143.4	59
65		129.7	116.7	127.5	121.1	125.3	125.3	65
72		110.2	96.6	109.1	102.3	105.4	105.8	72
79		94.5	81.1	93.2	86.6	89.4	89.9	79
85		83.4	70.4	82.3	75.7	78.5	79.0	85
92		73.0	59.5	71.7	65.3	67.9	68.3	92
98		65.5	51.9	64.0	57.6	60.4	60.9	98
105		-	44.0	56.6	49.8	52.6	53.1	105
111		-	38.6	51.0	43.9	46.8	47.2	111
118		-	-	45.0	38.0	40.8	41.3	118
124		-	-	40.6	33.7	36.4	36.8	124
131		-	-	-	29.2	31.8	32.1	131
138		-	-	-	25.4	27.8	28.1	138
144		-	-	-	22.4	24.6	25.0	144
151		-	-	-	-	21.5	21.7	151
157		-	-	-	-	19.1	19.3	157
164		-	-	-	-	-	16.7	164
170		-	-	-	-	-	14.7	170
177		-	-	-	-	-	-	177

Lifting capacities main boom with SSL 0°

220,500 lb 360° 85 %

Main boom

Radius ft	ft	108.9	124.3	139.4	154.9	170.0	183.7	Radius ft
				1,000 lb				
19		410.1	-	-	-	-	-	19
23		396.5	357.0	321.8	-	-	-	23
26		372.3	346.9	317.7	262.8	-	-	26
29		333.3	331.3	311.9	256.7	214.9	183.3	29
33		284.8	287.1	289.3	250.8	206.9	180.5	33
39		230.4	234.7	236.9	236.7	198.9	172.4	39
46		187.2	189.2	191.4	193.7	187.1	165.2	46
52		173.1	161.0	171.0	167.5	169.0	157.1	52
59		147.9	136.8	145.7	141.3	143.5	143.4	59
65		129.7	116.7	127.5	121.1	125.3	125.3	65
72		110.2	96.6	109.1	102.3	105.4	105.8	72
79		94.5	81.1	93.2	86.6	89.4	89.9	79
85		83.4	70.4	82.3	75.7	78.5	79.0	85
92		73.0	59.5	71.7	65.3	67.9	68.3	92
98		65.5	51.9	64.0	57.6	60.4	60.9	98
105		-	44.0	56.6	49.8	52.6	53.1	105
111		-	38.6	51.0	43.9	46.8	47.2	111
118		-	-	45.0	38.0	40.8	41.3	118
124		-	-	40.6	33.7	36.4	36.8	124
131		-	-	-	29.2	31.8	32.1	131
138		-	-	-	25.4	27.8	28.1	138
144		-	-	-	22.4	24.6	25.0	144
151		-	-	-	-	21.5	21.7	151
157		-	-	-	-	19.1	19.3	157
164		-	-	-	-	-	16.7	164
170		-	-	-	-	-	14.7	170
177		-	-	-	-	-	-	177

Working ranges main boom extension

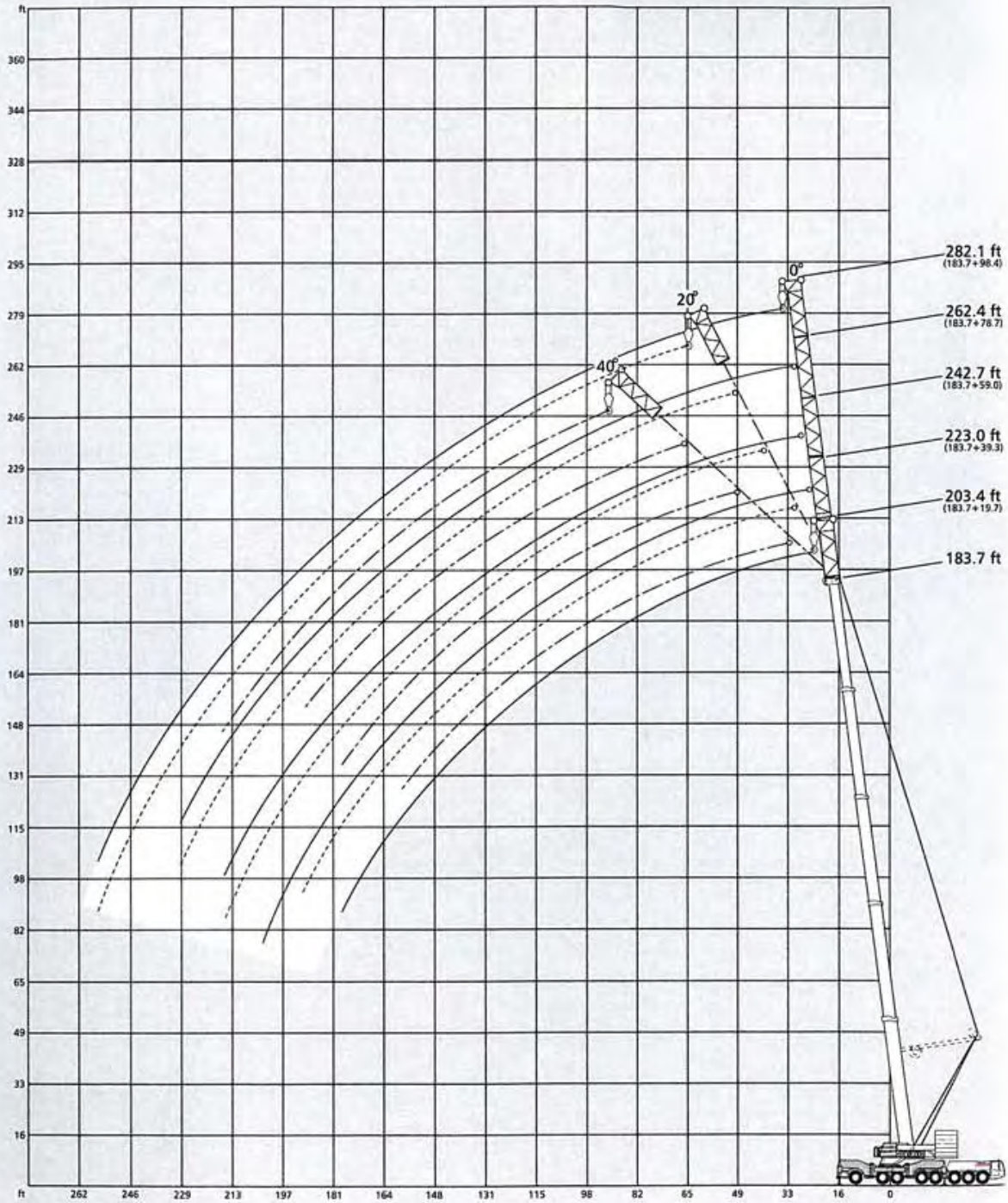

Lifting capacities main boom extension

308,700 lb — 360° — 85 %

183.7 ft Main boom

Radius ft	19.7 ft 0°	39.3 ft 0°	39.3 ft 20°	39.3 ft 40°*	59.0 ft 0°	59.0 ft 20°	59.0 ft 40°*	78.7 ft 0°	78.7 ft 20°	78.7 ft 40°*	98.4 ft 0°	98.4 ft 20°	98.4 ft 40°*	Radius ft
							Extension 1,000 lb							
39	107.2	-	-	-	-	-	-	-	-	-	-	-	-	39
46	97.3	82.6	-	-	68.5	-	-	-	-	-	-	-	-	46
52	89.6	76.1	-	-	63.8	-	-	55.6	-	-	-	-	-	52
59	82.0	69.4	59.7	-	59.1	-	-	51.6	-	-	45.0	-	-	59
65	76.2	64.4	56.7	49.5	55.2	43.8	-	48.3	-	-	42.1	-	-	65
72	70.0	59.2	53.2	47.2	51.2	41.7	-	45.0	-	-	39.3	-	-	72
79	64.8	54.7	49.9	45.1	47.7	39.6	34.1	42.0	33.2	-	36.7	-	-	79
85	60.8	51.3	47.3	43.3	44.8	38.0	33.1	39.5	31.8	-	34.7	-	-	85
92	56.8	48.0	44.4	41.1	42.0	36.1	31.9	37.2	30.1	-	32.5	25.5	-	92
98	53.5	45.3	42.2	39.3	39.6	34.7	30.9	35.1	28.9	24.9	30.7	24.5	-	98
105	50.0	42.5	39.9	37.2	37.4	33.0	29.7	33.2	27.7	24.0	29.0	23.3	-	105
111	47.2	40.3	38.0	35.6	35.4	31.6	28.7	31.4	26.5	23.4	27.6	22.5	19.4	111
118	44.3	37.9	35.9	33.9	33.5	30.0	27.5	29.7	25.3	22.7	26.0	21.6	18.7	118
124	41.9	35.9	34.3	32.3	31.9	28.7	26.7	28.3	24.5	22.1	24.8	20.8	18.1	124
131	39.3	34.0	32.4	30.7	30.0	27.5	25.8	26.9	23.4	21.4	23.6	19.8	17.4	131
138	36.9	31.9	30.8	29.0	28.3	26.2	24.8	25.5	22.4	20.4	22.2	18.9	16.7	138
144	35.1	30.3	29.6	28.0	27.1	25.1	24.0	24.3	21.6	19.8	21.2	18.3	16.3	144
151	33.0	28.6	28.2	26.6	25.5	24.0	23.1	22.9	20.7	19.1	20.2	17.4	15.6	151
157	31.6	27.4	26.9	25.6	24.5	23.2	22.5	21.9	20.1	18.7	19.2	16.8	15.2	157
164	29.9	25.8	25.5	-	23.1	22.0	21.6	20.7	19.1	18.0	18.3	16.0	14.7	164
177	27.3	23.6	23.3	-	20.9	20.3	20.0	18.5	17.8	16.7	16.5	14.7	13.9	177
190	-	21.6	21.4	-	19.0	18.5	-	16.7	16.3	15.6	14.8	13.4	13.0	190
203	-	19.8	-	-	17.2	16.8	-	15.0	15.0	-	13.2	12.1	12.1	203
216	-	-	-	-	15.7	15.2	-	13.5	13.5	-	11.9	11.0	11.2	216
229	-	-	-	-	-	-	-	12.1	12.1	-	10.4	9.9	-	229
243	-	-	-	-	-	-	-	10.7	-	-	9.0	8.5	-	243
256	-	-	-	-	-	-	-	-	-	-	7.7	7.4	-	256

88,200 lb — 360° — 85 %

183.7 ft Main boom

Radius ft	19.7 ft 0°	39.3 ft 0°	39.3 ft 20°	39.3 ft 40°	59.0 ft 0°	59.0 ft 20°	59.0 ft 40°	78.7 ft 0°	78.7 ft 20°	78.7 ft 40°	98.4 ft 0°	98.4 ft 20°	98.4 ft 40°	Radius ft
							Extension 1,000 lb							
39	107.2	-	-	-	-	-	-	-	-	-	-	-	-	39
46	97.2	82.6	-	-	68.5	-	-	-	-	-	-	-	-	46
52	82.7	76.1	-	-	63.8	-	-	55.6	-	-	-	-	-	52
59	65.1	63.8	59.7	-	59.1	-	-	51.6	-	-	45.0	-	-	59
65	53.8	52.5	56.7	49.5	51.6	43.8	-	48.3	-	-	42.1	-	-	65
72	43.2	42.1	47.8	47.2	41.9	41.7	-	41.6	-	-	39.3	-	-	72
79	35.0	33.9	39.1	43.5	33.9	39.5	34.1	33.9	33.2	-	34.1	-	-	79
85	29.1	28.2	32.9	36.9	28.2	35.2	33.1	28.2	31.8	-	28.7	-	-	85
92	23.4	22.8	27.0	30.3	22.8	29.0	31.9	23.0	30.1	-	23.5	25.5	-	92
98	19.2	18.8	22.5	25.6	19.0	24.5	29.4	19.2	26.4	24.9	19.6	24.5	-	98
105	15.2	14.9	18.2	20.9	14.9	20.2	24.6	15.2	22.0	24.0	15.8	23.3	-	105
111	12.1	11.9	15.0	17.3	12.1	16.8	21.0	12.3	18.8	23.4	13.0	20.7	19.4	111
118	9.0	8.6	11.5	13.5	9.3	13.5	17.2	9.5	15.2	20.5	10.1	17.2	18.7	118
124	6.6	6.4	8.8	10.6	7.0	11.0	14.4	7.3	12.6	17.5	7.9	14.6	18.1	124
131	-	-	6.2	7.8	4.7	8.4	11.1	5.1	10.0	14.4	5.8	11.9	17.4	131
138	-	-	-	5.2	-	6.1	8.5	-	7.6	11.6	-	9.4	14.6	138
144	-	-	-	-	-	-	6.3	-	5.8	9.3	-	7.6	12.4	144
151	-	-	-	-	-	-	-	-	-	7.2	-	5.7	10.1	151
157	-	-	-	-	-	-	-	-	-	5.4	-	-	8.1	157
164	-	-	-	-	-	-	-	-	-	-	-	-	6.1	164
177	-	-	-	-	-	-	-	-	-	-	-	-	-	177

Remarks

* 264,600 lb counterweight

** 352,800 lb counterweight

Remarks page 15

* 407,900 lb counterweight

** SSL 30°

Lifting capacities main boom extension with SSL 0°

352,800 lb — 360° — 85 %

183.7 ft Main boom

Radius ft	19.6 ft 0°	39.3 ft 0°**	39.3 ft 0°	39.3 ft 20°	39.3 ft 40°	59.0 ft 0°**	59.0 ft 0°	59.0 ft 20°	59.0 ft 40°	Extension 78.7 ft 0°**	78.7 ft 0°	78.7 ft 20°	78.7 ft 40°	98.4 ft 0°**	98.4 ft 0°	98.4 ft 20°	98.4 ft 40°	Radius ft
										1,000 lb								
29	110.2	-	-	-	-	-	-	-	-	-	-	-	-	-	-	-	-	29
33	110.2	-	-	-	-	-	-	-	-	-	-	-	-	-	-	-	-	33
39	110.2	108.1	100.8	-	-	92.5	82.4	-	-	-	-	-	-	-	-	-	-	39
46	110.2	104.6	99.4	-	-	88.1	81.7	-	-	72.6	66.7	-	-	63.0	55.3	-	-	46
52	110.2	101.4	97.7	85.2	-	84.5	80.7	-	-	67.8	64.1	-	-	58.7	53.2	-	-	52
59	110.2	97.2	95.4	82.2	67.9	80.2	79.1	59.1	-	62.8	61.0	-	-	54.2	50.9	-	-	59
65	107.8	93.4	93.0	79.4	65.9	76.6	77.5	56.6	-	59.0	58.6	-	-	50.8	49.1	-	-	65
72	104.7	88.7	90.2	76.3	63.5	72.6	75.2	54.0	-	54.9	55.8	39.2	-	47.2	46.7	-	-	72
79	101.7	84.0	86.9	73.0	61.4	68.8	72.6	51.7	41.1	51.4	53.0	37.8	-	44.2	44.6	-	-	79
85	98.9	80.0	83.9	70.2	59.6	65.6	70.2	49.9	40.1	48.8	50.8	36.4	-	41.7	43.0	30.9	-	85
92	95.6	75.3	80.6	66.9	57.7	62.1	67.1	47.8	39.2	46.0	48.4	35.2	28.8	39.2	40.9	29.7	-	92
98	92.5	71.4	77.5	64.3	56.3	59.2	64.7	46.1	38.2	43.8	46.2	34.0	28.2	37.3	39.3	28.7	-	98
105	89.0*	67.2	74.2	61.2	54.6	56.2	61.7	44.5	37.4	41.8	44.0	33.0	27.5	35.4	37.4	27.5	22.2	105
111	84.6*	63.6	71.2	58.8	53.2	53.5	59.3	43.1	36.6	40.0	42.2	32.0	27.1	33.8	36.0	26.7	21.8	111
118	77.5*	60.0	68.1	56.4	51.8	50.7	56.7	41.6	35.9	38.3	40.3	31.1	26.6	32.4	34.4	25.8	21.1	118
124	72.0*	56.9	65.5	54.4	50.6	48.5	54.2	40.4	35.1	36.9	38.7	30.2	26.0	31.2	33.0	25.0	20.7	124
131	66.3*	53.8*	62.7	52.5	49.2	46.1	51.8	39.2	34.4	35.3	37.0	29.5	25.5	29.8	31.5	24.2	20.2	131
138	60.9*	50.8*	59.8	50.6	48.0	44.0	49.5	38.1	33.9	33.9	35.4	28.6	25.3	28.6	30.1	23.5	19.8	138
144	56.9*	48.6*	56.8	49.4	47.2	42.2	47.5	37.3	33.3	32.9	34.4	28.0	24.9	27.6	29.1	22.9	19.4	144
151	52.6*	45.8*	52.6	47.8	46.2	40.3	45.3	36.3	32.8	31.5	33.0	27.3	24.4	26.4	27.9	22.2	18.9	151
157	49.4*	43.8*	49.2	46.8*	45.4	38.7	43.9	35.5	32.6	30.7	32.2	26.7	24.2	25.6	26.9	21.6	18.7	157
164	45.6*	41.4*	45.6	45.6*	-	37.0	42.1	34.6	32.1	29.5	31.0	26.2	23.8	24.6	26.0	21.1	18.3	164
177	38.0*	37.3*	39.7	40.6*	-	33.9*	39.0	33.3	31.7	27.5	29.5	25.1	23.3	22.9	24.4	20.0	17.8	177
190	-	33.3*	33.4	35.1*	-	31.1*	35.3	32.4	-	25.8	28.0	24.2	22.9	21.6	23.1	19.2	17.2	190
203	-	-	25.6	-	-	28.1*	30.1	31.7*	-	24.3	26.9	23.3	-	20.3	22.0	18.3	16.9	203
216	-	-	-	-	-	23.9*	24.0	26.4*	-	22.5*	25.8	22.7	-	19.0	20.9	17.6	16.7	216
229	-	-	-	-	-	-	-	-	-	21.0*	22.4	22.2	-	17.9	19.9	17.0	-	229
243	-	-	-	-	-	-	-	-	-	-	-	-	-	16.7	18.9	16.7	-	243
256	-	-	-	-	-	-	-	-	-	-	-	-	-	15.2	15.1	16.5	-	256

220,500 lb — 360° — 85 %

183.7 ft Main boom

Radius ft	19.6 ft 0°	39.3 ft 0°**	39.3 ft 0°	39.3 ft 20°	39.3 ft 40°	59.0 ft 0°**	59.0 ft 0°	59.0 ft 20°	59.0 ft 40°	Extension 78.7 ft 0°**	78.7 ft 0°	78.7 ft 20°	78.7 ft 40°	98.4 ft 0°**	98.4 ft 0°	98.4 ft 20°	98.4 ft 40°	Radius ft
										1,000 lb								
29	110.2	-	-	-	-	-	-	-	-	-	-	-	-	-	-	-	-	29
33	110.2	-	-	-	-	-	-	-	-	-	-	-	-	-	-	-	-	33
39	110.2	108.1	100.8	-	-	92.5	82.4	-	-	-	-	-	-	-	-	-	-	39
46	110.2	104.6	99.4	-	-	88.1	81.7	-	-	72.6	66.7	-	-	63.0	55.3	-	-	46
52	110.2	101.4	97.7	85.2	-	84.5	80.7	-	-	67.8	64.1	-	-	58.7	53.2	-	-	52
59	110.2	97.2	95.4	82.2	67.9	80.2	79.1	59.1	-	62.8	61.0	-	-	54.2	50.9	-	-	59
65	107.8	93.4	93.0	79.4	65.9	76.6	77.5	56.6	-	59.0	58.6	-	-	50.8	49.1	-	-	65
72	104.7	88.7	90.2	76.3	63.5	72.6	75.2	54.0	-	54.9	55.8	39.2	-	47.2	46.7	-	-	72
79	93.0	84.0	86.8	73.0	61.4	68.8	72.6	51.7	41.1	51.4	53.0	37.8	-	44.2	44.6	-	-	79
85	81.9	80.0	82.0	70.2	59.6	65.6	70.2	49.9	40.1	48.8	50.8	36.4	-	41.7	43.0	30.9	-	85
92	71.0	71.4	71.4	66.9	57.7	62.1	67.1	47.8	39.2	46.0	48.4	35.2	28.8	39.2	40.9	29.7	-	92
98	63.3	63.8	63.8	64.3	56.3	59.2	64.7	46.1	38.2	43.8	46.2	34.0	28.2	37.3	39.3	28.7	-	98
105	55.5	55.9	55.9	59.5	54.6	56.2	57.3	44.5	37.4	41.8	44.0	33.0	27.5	35.4	37.4	27.5	22.2	105
111	49.7	50.1	50.1	53.4	53.2	51.3	51.4	43.1	36.6	40.0	42.2	32.0	27.1	33.8	36.0	26.7	21.8	111
118	43.5	43.9	43.9	47.2	49.4	45.2	45.2	41.6	35.9	38.3	40.3	31.1	26.6	32.4	34.4	25.8	21.1	118
124	39.0	39.3	39.3	42.4	44.6	40.6	40.6	40.4	35.1	36.9	38.7	30.2	26.0	31.2	33.0	25.0	20.7	124
131	34.1	34.5	34.5	37.4	39.2	35.8	35.8	39.2	34.4	35.3	37.0	29.5	25.5	29.8	31.5	24.2	20.2	131
138	30.0	30.3	30.3	32.7	34.4	31.6	31.6	35.5	33.9	33.1	33.1	28.6	25.3	28.6	30.1	23.5	19.8	138
144	26.8	27.0	27.0	29.3	30.6	28.4	28.4	31.9	33.3	29.9	29.9	28.0	24.9	27.6	29.1	22.9	19.4	144
151	23.3	23.5	23.5	25.7	26.8	24.8	24.8	28.1	30.6	26.4	26.4	27.3	24.4	26.4	27.9	22.2	18.9	151
157	20.7	20.9	20.9	22.9	23.8	22.2	22.2	25.3	27.5	23.8	23.8	26.7	24.2	25.2	25.3	21.6	18.7	157
164	17.8	18.0	18.0	19.8	-	19.4	19.4	22.2	24.0	20.9	20.9	24.7	23.8	22.5	22.5	21.1	18.3	164
177	13.5	13.7	13.7	14.8	-	14.8	14.8	17.2	18.5	16.1	16.1	19.6	22.0	17.7	17.7	20.0	17.8	177
190	-	9.7	9.7	10.6	-	11.1	11.1	12.8	-	12.4	12.4	15.3	17.0	13.7	13.7	17.6	17.2	190
203	-	-	6.4	-	-	7.8	7.8	9.1	-	9.1	9.1	11.3	-	10.4	10.4	13.7	15.9	203
216	-	-	-	-	-	4.9	4.9	6.0	-	6.2	6.2	8.0	-	7.4	7.4	10.2	12.0	216
229	-	-	-	-	-	-	-	-	-	-	-	5.2	-	4.9	4.9	7.2	-	229

Working ranges fixed fly jib

Offset fixed fly jib

A	B	C 0°/20°/40°
86.6 ft	48.9 ft	37.7 ft
106.3 ft	48.9 ft	57.4 ft
126.0 ft	68.6 ft	57.4 ft
145.7 ft	68.6 ft	77.0 ft
165.4 ft	88.2 ft	77.0 ft
185.0 ft	88.2 ft	96.8 ft
204.7 ft	107.9 ft	96.8 ft

(27.6 ft + 47.2 ft + 66.9 ft only 0°)

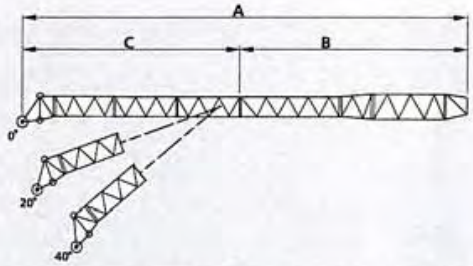

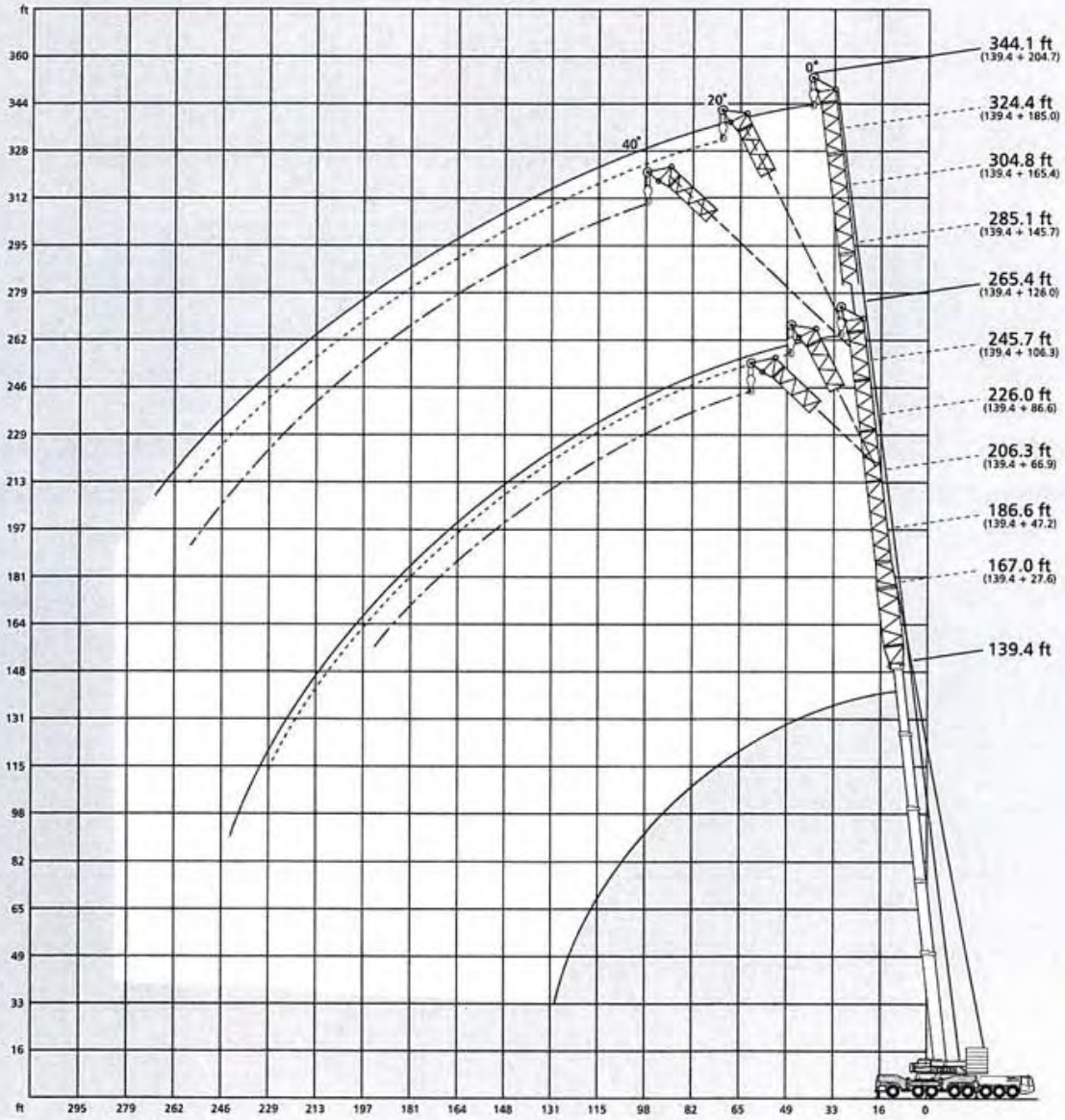

Lifting capacities fixed fly jib

360° 85 %

139.4 ft Main boom

Radius ft	27.6 ft 0°	47.2 ft 0°	66.9 ft 0°	86.6 ft 0°	86.6 ft 20°	86.6 ft 40°	Fly jib 106.3 ft 0°	106.3 ft 20°	106.3 ft 40°	126.0 ft 0°	126.0 ft 20°	126.0 ft 40°	Radius ft
							1,000 lb						
33	172.0	-	-	-	-	-	-	-	-	-	-	-	33
39	153.4	138.7	107.9	-	-	-	-	-	-	-	-	-	39
46	135.0	122.2	100.9	96.9	-	-	-	-	-	-	-	-	46
52	122.0	110.5	95.0	89.2	-	-	77.0	-	-	67.3	-	-	52
59	109.2	98.6	88.2	81.1	68.3	-	72.1	-	-	63.0	-	-	59
65	100.1	90.1	82.7	75.1	65.5	56.8	67.8	50.4	-	59.8	-	-	65
72	91.2	81.7	76.6	68.7	62.2	54.7	63.1	47.9	-	56.0	46.3	-	72
79	83.7	74.9	70.7	63.0	58.9	52.6	58.9	45.5	39.4	52.5	43.7	-	79
85	78.1	69.7	66.1	58.8	55.9	51.0	55.3	43.7	38.2	49.7	41.7	38.2	85
92	72.2	64.5	60.9	54.5	52.8	48.6	51.2	41.6	37.0	46.4	39.6	36.5	92
98	67.7	60.4	56.9	51.1	50.0	46.8	48.0	39.7	35.8	43.8	37.8	35.3	98
105	63.0	56.2	49.6	47.8	46.9	44.7	44.7	37.9	34.6	41.2	35.9	33.9	105
111	59.2	52.7	46.5	45.0	44.3	42.9	41.9	36.3	33.4	38.8	34.5	32.7	111
118	55.6	49.2	43.7	42.1	41.7	40.8	39.0	34.6	32.2	36.4	32.8	31.5	118
124	52.3	46.3	41.3	39.7	39.4	38.9	36.6	33.2	31.2	34.2	31.6	30.5	124
131	49.0	43.7	38.9	37.3	37.1	36.8	34.2	31.5	30.0	32.2	30.2	29.3	131
138	45.9	40.9	37.3	34.9	34.7	34.9	32.1	29.9	28.8	30.1	28.8	28.1	138
144	43.5	39.1	35.4	33.3	33.1	33.3	30.5	28.7	27.8	28.5	27.8	27.1	144
151	40.7	37.0	34.0	31.2	31.2	31.5	28.6	27.3	26.6	26.8	26.4	26.0	151
157	38.1	35.4	32.4	29.8	29.8	30.0	27.4	26.1	25.6	25.4	25.2	25.1	157
164	-	33.5	30.0	28.2	28.2	28.4	25.8	24.7	24.6	24.0	24.0	24.0	164
177	-	30.2	27.3	25.8	25.3	-	23.6	22.5	22.5	21.6	21.6	21.8	177
190	-	-	-	23.4	22.7	-	21.8	20.8	-	19.4	19.4	19.6	190
203	-	-	-	21.6	20.1	-	20.1	18.7	-	17.6	17.4	-	203
216	-	-	-	-	-	-	18.5	17.4	-	16.1	15.7	-	216
229	-	-	-	-	-	-	16.8	-	-	14.8	14.1	-	229
243	-	-	-	-	-	-	-	-	-	13.2	-	-	243

ft	145.7 ft			165.4 ft			185.0 ft			204.7 ft			ft
							1,000 lb						
59	55.8	-	-	48.0	-	-	-	-	-	-	-	-	59
65	52.5	-	-	45.0	-	-	39.9	-	-	-	-	-	65
72	49.0	-	-	41.9	-	-	37.1	-	-	32.2	-	-	72
79	45.7	-	-	38.9	-	-	34.5	-	-	29.9	-	-	79
85	43.3	33.7	-	36.7	31.3	-	32.5	-	-	28.0	-	-	85
92	40.5	32.6	-	34.3	29.7	-	30.3	-	-	25.9	-	-	92
98	38.2	31.3	-	32.3	28.5	-	28.5	23.8	-	24.3	-	-	98
105	35.9	30.2	26.2	30.4	27.3	25.7	26.8	22.7	-	22.7	21.1	-	105
111	34.1	29.3	26.0	29.0	26.1	24.7	25.2	21.8	-	21.2	20.1	-	111
118	32.0	28.2	25.5	27.3	24.9	23.6	23.8	20.9	-	19.8	19.1	-	118
124	30.3	27.4	25.1	25.9	23.9	22.6	22.6	20.1	19.4	18.8	18.1	16.8	124
131	28.7	26.2	24.4	24.7	22.9	21.6	21.2	19.4	18.5	17.6	17.2	16.3	131
138	27.0	25.3	24.0	23.5	21.7	20.4	20.0	18.4	17.8	16.5	16.2	15.6	138
144	25.8	24.5	23.4	22.5	20.9	19.8	19.2	17.8	17.0	15.7	15.6	15.2	144
151	24.2	23.5	22.6	21.3	20.0	18.9	18.0	16.9	16.3	14.5	14.7	14.5	151
157	23.2	22.7	21.8	20.5	19.4	18.1	17.2	16.3	15.7	13.9	14.1	14.1	157
164	21.8	21.6	21.1	19.6	18.5	17.4	16.3	15.6	14.9	13.2	13.4	13.4	164
177	19.6	19.8	19.4	17.8	16.9	15.8	14.7	14.3	13.6	11.9	12.1	12.3	177
190	17.8	18.1	17.8	16.1	15.4	14.5	13.2	13.0	12.5	10.8	11.0	11.2	190
203	16.1	16.3	16.3	14.5	13.9	13.4	11.9	11.9	11.4	9.7	10.1	10.1	203
216	14.4	14.6	14.8	13.0	12.6	12.1	10.8	10.6	10.4	8.8	9.0	9.0	216
229	13.0	12.8	-	11.5	11.0	11.0	9.5	9.3	9.3	7.9	8.2	7.9	229
243	11.4	11.4	-	9.8	9.6	-	8.3	8.1	8.3	7.0	7.2	6.5	243
256	10.1	10.1	-	8.5	8.5	-	7.0	7.0	-	5.7	6.1	5.5	256
269	8.8	-	-	7.0	7.4	-	5.7	6.1	-	4.6	-	-	269
282	-	-	-	5.5	-	-	4.4	-	-	-	-	-	282
295	-	-	-	-	-	-	-	-	-	-	-	-	295

Remarks

Counterweight	132,300 lb	176,400 lb	220,500 lb	264,600 lb	308,700 lb	352,800 lb	407,900 lb

Max. capacities with minimum counterweight

Further counterweight configurations on request

4

Lifting capacities fixed fly jib

360° 85 %

170.0 ft **Main boom**

Radius ft	27.6 ft 0°	47.2 ft 0°	66.9 ft 0°	86.6 ft 0°	86.6 ft 20°	86.6 ft 40°	Fly jib 106.3 ft 0°	106.3 ft 20°	106.3 ft 40°	126.0 ft 0°	126.0 ft 20°	126.0 ft 40°	Radius ft
						1,000 lb							
39	113.5	-	-	-	-	-	-	-	-	-	-	-	39
46	101.5	85.0	72.6	-	-	-	-	-	-	-	-	-	46
52	92.6	78.5	67.4	57.4	-	-	50.7	-	-	-	-	-	52
59	83.8	71.9	61.9	52.9	-	-	46.7	-	-	40.5	-	-	59
65	77.6	66.6	57.7	49.3	43.0	-	43.5	-	-	37.9	-	-	65
72	71.3	61.4	53.2	45.5	40.1	37.0	39.9	33.7	-	35.1	-	-	72
79	65.9	56.7	49.2	42.2	37.3	34.9	36.9	31.6	-	32.5	27.7	-	79
85	62.1	53.3	46.4	39.5	35.3	33.1	34.7	29.8	27.1	30.3	26.5	-	85
92	58.1	49.5	43.3	36.9	33.0	31.4	32.1	27.9	25.5	28.1	25.1	23.7	92
98	54.9	46.7	40.9	34.7	31.4	29.8	30.3	26.5	24.1	26.5	23.8	22.5	98
105	51.5	43.8	38.5	32.6	29.5	28.2	28.2	25.1	22.9	24.6	22.4	21.1	105
111	48.5	41.4	36.5	31.0	27.9	26.8	26.6	23.9	21.7	23.2	21.2	20.1	111
118	45.4	39.0	34.6	29.1	26.4	25.3	25.1	22.5	20.7	21.8	19.8	19.1	118
124	43.0	36.8	33.0	27.7	25.0	24.1	23.7	21.4	19.7	20.6	18.8	18.1	124
131	40.2	34.6	31.3	26.2	23.8	22.9	22.5	20.5	18.7	19.2	17.6	17.2	131
138	37.6	32.7	29.7	24.8	22.6	21.5	21.1	19.3	17.8	18.0	16.5	16.2	138
144	35.8	31.1	28.5	23.6	21.6	20.7	20.1	18.5	17.2	17.2	15.7	15.6	144
151	33.4	29.3	27.1	22.4	20.7	19.6	18.9	17.8	16.5	16.3	14.5	14.7	151
157	31.8	28.0	26.0	21.4	19.9	18.8	18.1	17.0	15.9	15.4	13.9	14.1	157
164	30.2	26.6	24.9	20.2	19.1	18.0	17.2	16.3	15.2	14.5	13.0	13.4	164
177	27.5	24.2	22.9	18.5	17.6	16.5	15.4	14.7	14.1	13.0	11.7	12.1	177
190	-	22.1	21.4	17.0	16.3	-	14.1	13.4	13.2	11.7	10.4	11.0	190
203	-	20.3	19.8	15.6	14.8	-	12.8	12.3	12.1	10.6	9.5	9.9	203
216	-	-	18.5	14.5	13.2	-	11.7	11.2	-	9.5	8.6	8.6	216
229	-	-	-	13.5	11.5	-	10.6	10.4	-	8.4	7.7	-	229
243	-	-	-	12.5	-	-	9.9	9.4	-	7.4	6.8	-	243
256	-	-	-	-	-	-	9.0	-	-	6.3	5.7	-	256
269	-	-	-	-	-	-	-	-	-	-	4.6	-	269
282	-	-	-	-	-	-	-	-	-	-	-	-	282

ft	145.7 ft			165.4 ft			185.0 ft			204.7 ft			ft
						1,000 lb							
65	33.9	-	-	30.6	-	-	-	-	-	-	-	-	65
72	31.5	-	-	28.2	-	-	-	-	-	-	-	-	72
79	29.2	-	-	26.3	-	-	-	-	-	-	-	-	79
85	27.4	-	-	24.5	-	-	-	-	-	-	-	-	85
92	25.3	21.7	-	22.8	19.5	-	-	-	-	-	-	-	92
98	23.7	20.3	-	21.2	18.5	-	-	-	-	-	-	-	98
105	22.2	19.1	-	19.8	17.4	-	-	-	-	-	-	-	105
111	20.8	18.1	17.7	18.4	16.4	15.2	-	-	-	-	-	-	111
118	19.4	16.9	16.7	16.9	15.2	14.5	-	-	-	-	-	-	118
124	18.4	16.1	15.9	15.7	14.4	13.9	-	-	-	-	-	-	124
131	17.2	15.2	15.2	14.5	13.2	13.2	-	-	-	-	-	-	131
138	16.0	14.5	14.5	13.4	12.3	12.5	-	-	-	-	-	-	138
144	15.2	13.9	13.9	12.6	11.7	11.9	-	-	-	-	-	-	144
151	14.3	13.2	13.2	11.6	10.7	11.2	-	-	-	-	-	-	151
157	13.5	12.6	12.6	10.8	10.1	10.6	-	-	-	-	-	-	157
164	12.5	11.9	11.9	9.9	9.4	9.9	-	-	-	-	-	-	164
177	11.2	11.0	10.8	8.3	8.6	8.6	-	-	-	-	-	-	177
190	9.9	9.9	9.7	7.0	-	7.5	-	-	-	-	-	-	190
203	8.6	8.8	8.6	5.9	-	-	-	-	-	-	-	-	203
216	7.5	7.7	7.5	4.8	-	-	-	-	-	-	-	-	216
229	6.4	6.8	6.6	-	-	-	-	-	-	-	-	-	229
243	5.4	5.9	-	-	-	-	-	-	-	-	-	-	243
256	4.6	5.0	-	-	-	-	-	-	-	-	-	-	256

Remarks

Counterweight	132,300 lb	176,400 lb	220,500 lb	264,600 lb	308,700 lb	352,800 lb	407,900 lb

Max. capacities with minimum counterweight

Further counterweight configurations on request

(909) 222-0202 www.reliablecraneservice.com 260 North Smith Ave. Corona, CA 92880

Lifting capacities fixed fly jib with SSL 0°

360° 85 %

170.0 ft Main boom

Fly jib

Radius ft	27.6 ft 0°***	27.6 ft 0°	42.2 ft 0°***	42.2 ft 0°	66.9 ft 0°***	66.9 ft 0°	86.6 ft 0°***	86.6 ft 0°	86.6 ft 20°	86.6 ft 40°	106.3 ft 0°***	106.3 ft 0°	106.3 ft 20°	106.3 ft 40°	Radius ft
							1,000 lb								
33	179.0	151.4	-	-	-	-	-	-	-	-	-	-	-	-	33
39	166.7	145.8	146.6	121.7	127.3	96.0	-	73.8	-	-	-	-	-	-	39
46	153.3	139.0	134.3	116.3	115.8	93.2	96.9	73.8	-	-	80.6	61.4	-	-	46
52	142.4	133.4	124.8	111.9	107.2	90.6	90.2	73.0	-	-	75.3	60.6	-	-	52
59	130.8	126.8	114.7	106.5	97.9	87.1	83.1	71.4	63.3	-	70.1	59.3	-	-	59
65	121.5	121.3	106.8	101.8	91.0	84.0	77.9	69.6	59.8	51.3	65.9	57.7	47.6	-	65
72	111.3	115.2	98.5	96.4	83.9	80.1	72.2	66.8	56.0	48.7	61.4	55.8	45.0	-	72
79	102.2	109.3	90.8	91.3	77.6	76.1	67.0	63.8	52.8	46.4	57.4	53.4	42.4	-	79
85	95.1	104.5	84.9	87.0	72.9	72.7	63.2	60.9	50.1	44.6	54.1	51.4	40.4	35.3	85
92	87.3	99.0	78.8	82.1	68.0	68.9	59.0	57.4	47.3	42.5	50.8	48.6	38.3	33.9	92
98	81.5	94.0	73.7	78.1	64.2	65.5	55.9	54.4	45.3	40.9	48.2	46.4	36.5	32.9	98
111	70.3	79.3	64.5	70.4	57.1	58.9	50.0	47.8	41.1	37.6	43.4	41.4	32.9	30.5	111
124	61.1	66.5	56.6	63.8	51.0	53.2	45.0	42.1	37.6	34.7	39.2	36.6	29.9	28.1	124
138	53.0	55.6	49.5	56.7	45.1	48.0	40.5	37.4	34.5	32.1	35.4	32.3	27.0	25.5	138
151	46.9	47.3	44.0	48.4	40.5	44.2	36.7	34.1	31.9	29.9	32.3	29.0	24.6	23.5	151
164	40.5	40.5	39.2	41.6	36.3	41.0	33.3	31.5	29.5	28.0	29.5	26.6	22.9	21.8	164
177	32.7	32.7	35.1	35.7	32.8	38.3	30.4	29.7	27.5	26.2	27.1	24.7	21.4	20.3	177
190	-	-	29.2	29.2	29.6	34.2	27.6	28.2	25.8	-	24.7	22.9	20.0	18.9	190
203	-	-	20.5	20.5	26.7	28.6	24.9	26.9	24.0	-	22.5	21.8	19.2	18.1	203
216	-	-	-	-	22.0	22.1	22.5	25.2	22.5	-	20.5	20.7	18.3	-	216
229	-	-	-	-	-	-	19.7	19.9	19.7	-	18.6	19.6	17.4	-	229
243	-	-	-	-	-	-	12.6	12.6	-	-	16.4	17.7	16.7	-	243
256	-	-	-	-	-	-	-	-	-	-	12.5	12.5	-	-	256

ft	126.0 ft 0°***	126.0 ft 0°	126.0 ft 20°	126.0 ft 40°	145.7 ft 0°***	145.7 ft 0°	145.7 ft 20°	145.7 ft 40°	165.4 ft 0°***	165.4 ft 0°	165.4 ft 20°	165.4 ft 40°	ft
						1,000 lb							
52	66.4	51.4	-	-	-	40.8	-	-	-	-	-	-	52
59	61.9	50.7	-	-	54.2	40.3	-	-	47.6	35.9	-	-	59
65	58.3	49.7	-	-	51.2	39.9	-	-	45.2	35.5	-	-	65
72	54.5	48.3	40.8	-	47.9	39.0	-	-	42.8	34.6	-	-	72
79	51.0	46.6	38.7	-	44.8	38.0	-	-	40.2	33.6	-	-	79
85	48.2	45.0	36.6	31.8	42.4	36.8	29.8	-	38.2	32.6	28.0	-	85
92	45.1	42.9	34.7	30.4	39.8	35.4	28.6	-	36.1	31.4	26.4	-	92
98	42.7	40.9	32.9	29.3	37.8	34.2	27.4	-	34.3	30.2	25.2	-	98
111	38.3	36.5	29.8	27.0	33.6	31.2	25.2	21.8	30.5	27.6	22.5	20.1	111
124	34.3	32.4	27.0	25.0	30.3	28.1	23.0	20.3	27.2	24.8	20.3	18.3	124
138	31.0	28.1	24.2	22.9	27.0	24.6	20.6	18.9	23.9	21.7	18.2	16.7	138
151	28.2	24.8	22.2	21.1	24.6	21.8	18.9	17.6	21.5	19.1	16.3	15.2	151
164	25.8	22.2	20.2	19.4	22.2	19.4	17.4	16.3	19.1	16.7	14.7	13.8	164
177	23.6	20.3	18.7	17.8	20.3	17.4	15.8	15.2	17.2	14.7	13.4	12.8	177
190	21.6	18.7	17.4	16.5	18.5	15.9	14.5	14.3	15.6	13.0	12.1	11.7	190
203	19.8	17.6	16.1	15.2	17.0	14.5	13.6	13.2	14.1	11.7	11.0	10.8	203
216	18.1	16.7	15.0	14.1	15.4	13.4	12.6	12.3	13.0	10.6	10.1	9.9	216
229	16.6	15.9	13.9	-	14.1	12.6	11.9	11.5	11.9	9.7	9.3	9.0	229
243	14.9	14.9	12.9	-	12.9	11.8	11.0	-	10.7	8.8	8.5	8.3	243
256	13.4	14.1	11.8	-	11.6	11.2	10.3	-	9.9	8.1	7.9	-	256
269	11.2	11.2	-	-	10.5	10.5	9.7	-	9.0	7.4	7.0	-	269
282	-	-	-	-	9.4	9.9	9.0	-	8.1	7.0	6.4	-	282
295	-	-	-	-	6.2	6.2	-	-	7.2	6.4	5.5	-	295
308	-	-	-	-	-	-	-	-	5.1	5.1	-	-	308
328	-	-	-	-	-	-	-	-	-	-	-	-	328

Remarks

Counterweight	176,400 lb	220,500 lb	264,600 lb	308,700 lb	352,800 lb	407,900 lb

Max. capacities with minimum counterweight

Further counterweight configurations on request

** SSL 30°

Working ranges fixed fly jib

Offset fixed fly jib

A	B	C 0°/20°/40°
86.6 ft	48.9 ft	37.7 ft
106.3 ft	48.9 ft	57.4 ft
126.0 ft	68.6 ft	57.4 ft
145.7 ft	68.6 ft	77.0 ft
165.4 ft	88.2 ft	77.0 ft

(27.6 ft + 47.2 ft + 66.9 ft only 0°)

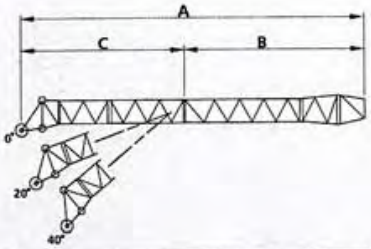

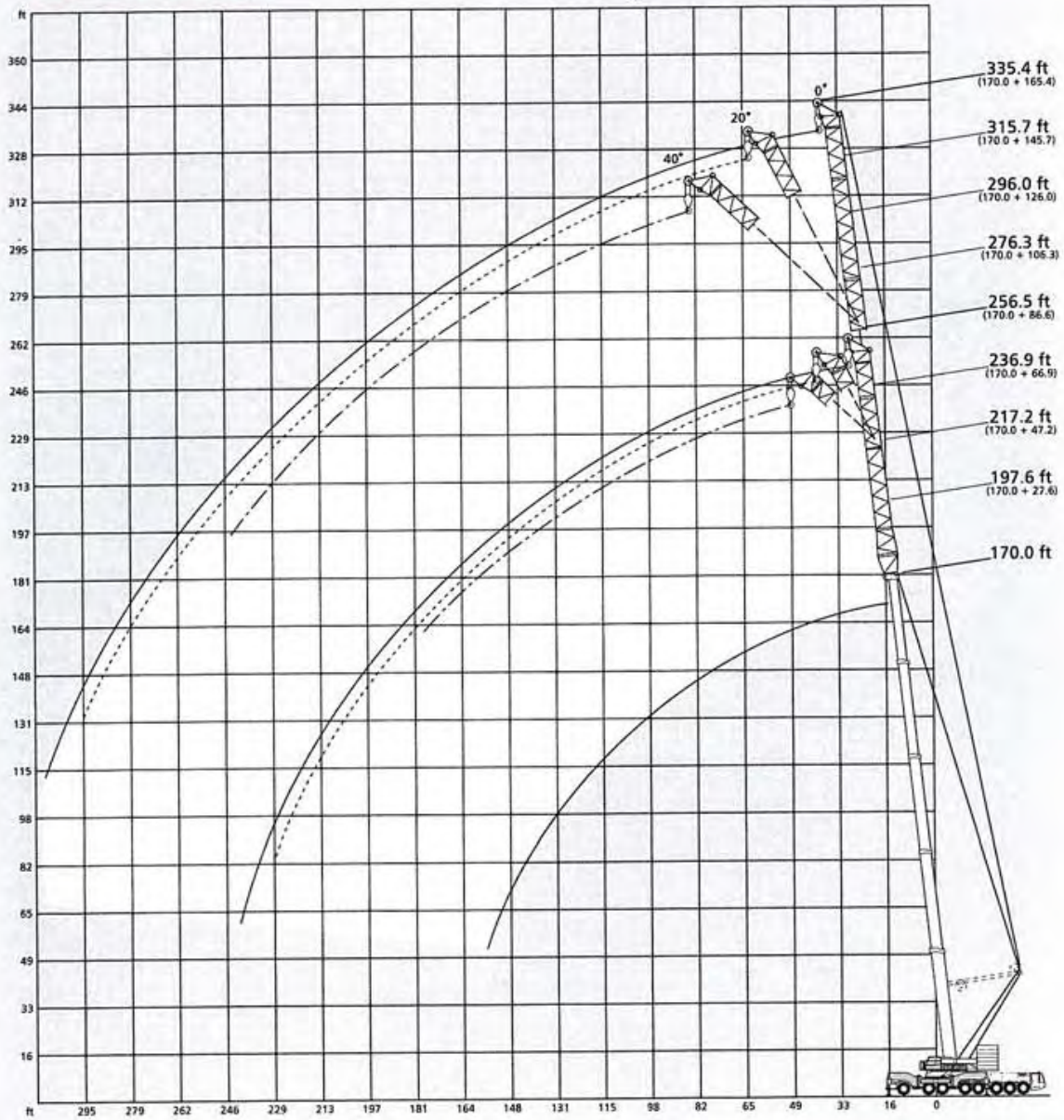

Working ranges luffing fly jib, main boom 83° to 65°

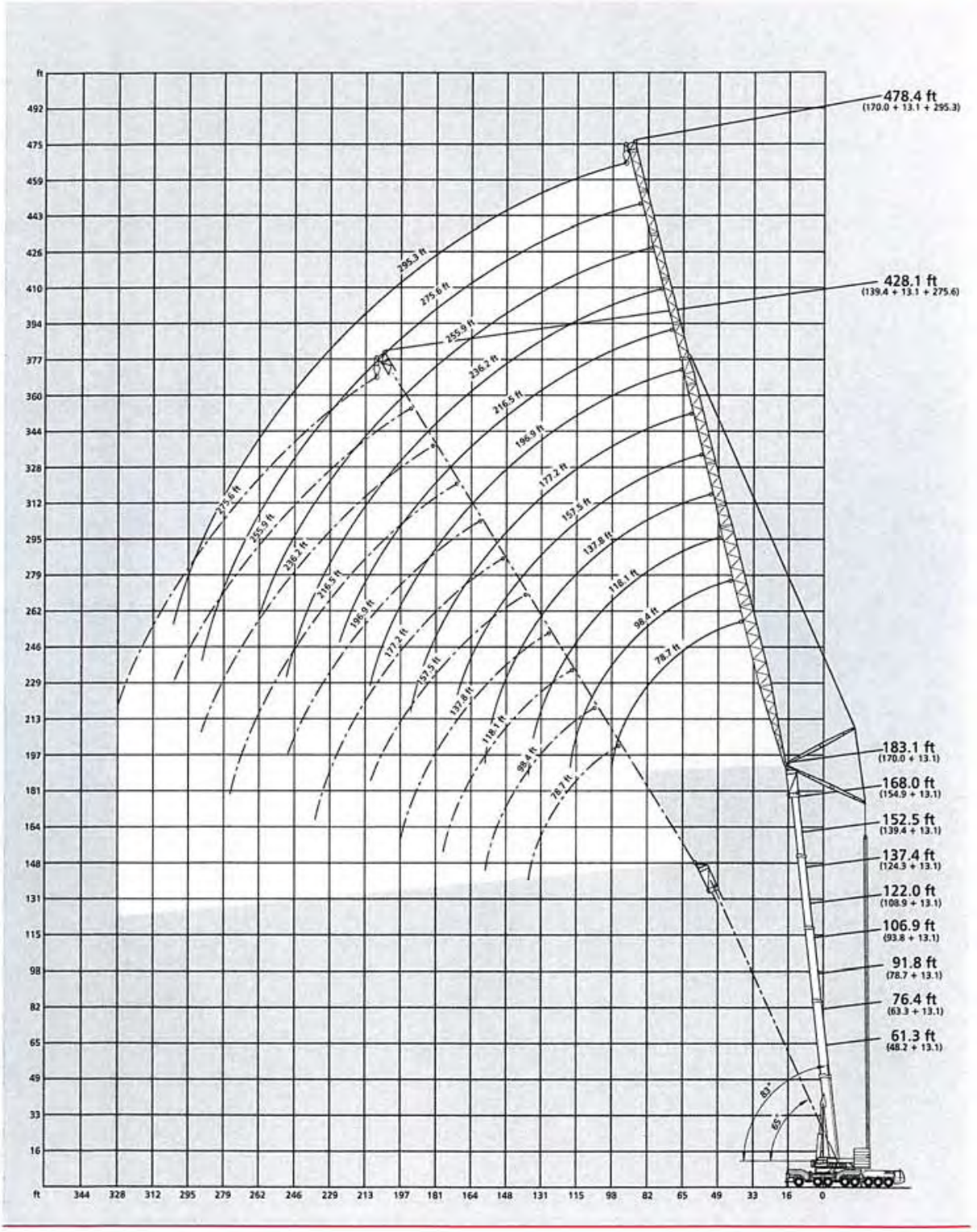

Lifting capacities luffing fly jib, main boom 83° to 65°

360° DIN/ISO

61.3 ft* **Main boom**

Radius ft	Fly jib 78.7 ft 83°	78.7 ft 73°	78.7 ft 65°	98.4 ft 83°	98.4 ft 73°	98.4 ft 65°	118.1 ft 83°	118.1 ft 73°	118.1 ft 65°	137.8 ft 83°	137.8 ft 73°	137.8 ft 65°	157.5 ft 83°	157.5 ft 73°	157.5 ft 65°	177.2 ft 83°	177.2 ft 73°	177.2 ft 65°	Radius ft
	1,000 lb																		
46	224.7	-	-	203.8	-	-	173.0	-	-	-	-	-	-	-	-	-	-	-	46
52	213.5	-	-	195.7	-	-	171.0	-	-	143.0	-	-	-	-	-	-	-	-	52
59	199.6	-	-	185.2	-	-	167.5	-	-	142.1	-	-	110.2	-	-	-	-	-	59
65	187.5	181.3	-	176.3	-	-	165.5	-	-	141.0	-	-	110.2	-	-	99.2	-	-	65
72	168.0	162.5	-	165.6	160.2	-	156.7	-	-	140.0	-	-	110.2	-	-	99.2	-	-	72
79	151.4	146.0	-	150.4	144.9	-	148.3	142.8	-	136.4	-	-	110.1	-	-	99.2	-	-	79
85	134.3	134.9	130.6	139.4	133.8	-	137.3	131.7	-	131.3	128.2	-	109.1	-	-	99.2	-	-	85
92	-	123.2	119.9	127.6	122.1	118.8	125.4	119.9	-	125.4	119.9	-	106.8	-	-	99.1	-	-	92
98	-	-	111.9	118.5	114.1	109.8	116.4	111.9	108.5	116.4	111.9	-	104.8	109.1	-	98.1	-	-	98
105	-	-	-	-	104.7	101.4	108.0	103.6	100.2	108.0	102.5	-	101.4	102.5	-	97.0	95.8	-	105
111	-	-	-	-	98.6	95.3	98.9	96.5	93.2	100.9	96.4	93.0	99.3	96.4	-	95.9	93.8	-	111
118	-	-	-	-	-	89.3	81.8	90.4	87.1	93.8	89.4	87.1	93.7	89.4	-	92.6	88.2	-	118
124	-	-	-	-	-	-	-	85.3	82.2	88.7	84.3	82.1	88.6	84.4	81.1	86.6	83.2	-	124
131	-	-	-	-	-	-	-	79.5	77.3	78.6	79.5	76.2	82.8	79.5	76.2	81.7	77.3	73.9	131
138	-	-	-	-	-	-	-	-	72.6	65.7	74.8	71.5	78.0	74.8	71.5	75.9	72.6	70.4	138
144	-	-	-	-	-	-	-	-	-	-	70.7	68.5	73.0	70.7	67.4	72.9	68.5	66.3	144
151	-	-	-	-	-	-	-	-	-	-	67.2	65.0	63.3	66.1	64.5	68.3	65.4	62.7	151
157	-	-	-	-	-	-	-	-	-	-	-	62.1	54.3	63.8	61.5	65.6	62.4	59.9	157
164	-	-	-	-	-	-	-	-	-	-	-	-	-	60.6	58.2	58.6	59.1	56.6	164
170	-	-	-	-	-	-	-	-	-	-	-	-	-	58.0	55.8	51.6	56.4	54.0	170
177	-	-	-	-	-	-	-	-	-	-	-	-	-	-	52.9	43.2	53.6	51.4	177
184	-	-	-	-	-	-	-	-	-	-	-	-	-	-	-	-	51.0	48.8	184
190	-	-	-	-	-	-	-	-	-	-	-	-	-	-	-	-	-	46.8	190
197	-	-	-	-	-	-	-	-	-	-	-	-	-	-	-	-	-	44.7	197
210	-	-	-	-	-	-	-	-	-	-	-	-	-	-	-	-	-	-	210

ft	196.9 ft			216.5 ft			236.2 ft			255.9 ft			275.6 ft			295.3 ft			ft
	1,000 lb																		
72	84.8	-	-	-	-	-	-	-	-	-	-	-	-	-	-	-	-	-	72
79	84.8	-	-	72.7	-	-	62.8	-	-	-	-	-	-	-	-	-	-	-	79
85	84.8	-	-	72.7	-	-	62.6	-	-	51.8	-	-	-	-	-	-	-	-	85
92	84.8	-	-	71.6	-	-	62.3	-	-	51.3	-	-	41.6	-	-	-	-	-	92
98	84.8	-	-	71.6	-	-	61.9	-	-	50.9	-	-	41.0	-	-	33.3	-	-	98
105	84.8	-	-	71.6	-	-	61.7	-	-	50.4	-	-	40.3	-	-	32.8	-	-	105
111	84.8	80.5	-	70.6	-	-	61.5	-	-	50.0	-	-	39.7	-	-	32.4	-	-	111
118	84.8	79.3	-	70.5	-	-	61.0	-	-	49.6	-	-	39.2	-	-	31.9	-	-	118
124	84.8	79.3	-	70.5	67.4	-	60.8	-	-	49.2	-	-	38.6	-	-	31.5	-	-	124
131	80.6	76.1	-	69.4	67.2	-	60.2	59.0	-	48.5	-	-	37.9	-	-	30.8	-	-	131
138	75.9	71.5	-	69.4	67.2	-	59.7	59.0	-	48.0	49.5	-	37.2	-	-	30.4	-	-	138
144	71.8	68.5	65.8	68.4	66.1	-	59.3	59.0	-	47.4	48.9	-	36.6	-	-	29.7	-	-	144
151	68.3	64.7	62.1	66.1	63.0	-	58.8	59.0	-	46.7	48.2	-	35.9	37.6	-	29.3	-	-	151
157	65.0	61.5	59.1	63.3	59.7	57.3	58.2	57.8	-	46.1	47.6	-	35.3	36.8	-	28.7	30.0	-	157
164	61.5	58.2	55.7	59.7	56.4	54.0	57.7	54.6	-	45.4	46.9	-	34.6	35.7	-	28.2	29.3	-	164
170	58.7	55.6	53.3	56.9	53.8	51.4	55.3	52.0	49.6	44.6	46.1	-	34.0	34.9	-	27.6	28.7	-	170
177	54.7	52.7	50.5	54.0	50.9	48.7	52.3	49.2	46.8	43.6	45.4	46.1	33.3	34.1	-	27.1	28.0	-	177
184	48.2	50.1	48.1	51.2	48.4	46.2	49.5	46.6	44.2	42.9	44.7	44.0	32.6	33.2	-	26.4	27.3	-	184
190	42.6	48.1	46.1	49.0	46.1	44.1	47.4	44.4	42.2	42.1	44.1	41.9	31.9	32.6	33.7	26.0	26.9	-	190
197	35.7	46.0	43.8	44.2	44.0	42.0	45.1	42.2	40.0	40.9	41.8	39.6	31.2	31.9	32.8	25.3	26.2	-	197
210	-	-	40.3	33.9	40.3	38.3	39.8	38.3	36.3	39.0	38.1	35.9	29.9	30.4	31.5	24.2	25.1	26.2	210
223	-	-	-	-	36.8	35.0	31.3	35.0	33.3	35.9	34.6	32.8	28.6	29.3	30.2	23.1	24.0	24.9	223
236	-	-	-	-	-	-	-	32.2	30.4	30.0	31.7	30.0	27.1	28.2	28.9	22.0	22.9	24.0	236
249	-	-	-	-	-	-	-	-	27.8	22.6	29.1	27.4	25.4	27.3	27.1	21.1	22.0	22.9	249
262	-	-	-	-	-	-	-	-	-	-	26.7	25.2	21.9	26.4	24.7	20.3	21.1	22.0	262
275	-	-	-	-	-	-	-	-	-	-	-	-	-	24.3	22.7	19.4	20.5	21.2	275
289	-	-	-	-	-	-	-	-	-	-	-	-	-	-	20.6	14.4	19.6	19.8	289
302	-	-	-	-	-	-	-	-	-	-	-	-	-	-	-	-	18.5	18.2	302
315	-	-	-	-	-	-	-	-	-	-	-	-	-	-	-	-	-	-	315

Remarks

* incl. 13.1 ft adapter

Counterweight	132,300 lb	176,400 lb	220,500 lb	264,600 lb	308,700 lb	352,800 lb	407,900 lb

Max. capacities with minimum counterweight — Further counterweight configurations on request

360° DIN/ISO

76.4 ft* **Main boom**

Fly jib

Radius ft	78.7 ft 83°	78.7 ft 73°	78.7 ft 65°	98.4 ft 83°	98.4 ft 73°	98.4 ft 65°	118.1 ft 83°	118.1 ft 73°	118.1 ft 65°	137.8 ft 83°	137.8 ft 73°	137.8 ft 65°	157.5 ft 83°	157.5 ft 73°	157.5 ft 65°	177.2 ft 83°	177.2 ft 73°	177.2 ft 65°	Radius ft
									1,000 lb										
46	220.3	-	-	196.1	-	-	-	-	-	-	-	-	-	-	-	-	-	-	46
52	209.3	-	-	189.1	-	-	160.9	-	-	-	-	-	-	-	-	-	-	-	52
59	196.3	-	-	180.8	-	-	159.8	-	-	133.3	-	-	106.9	-	-	-	-	-	59
65	185.3	-	-	172.7	-	-	158.7	-	-	133.3	-	-	106.9	-	-	92.5	-	-	65
72	165.8	158.0	-	163.3	151.3	-	154.4	-	-	132.3	-	-	106.9	-	-	92.5	-	-	72
79	150.4	142.7	-	149.3	140.6	-	147.1	-	-	131.0	-	-	106.9	-	-	92.5	-	-	79
85	138.4	131.6	-	137.3	130.5	-	136.0	127.0	-	126.9	-	-	106.9	-	-	92.5	-	-	85
92	-	119.9	115.5	125.4	118.8	-	124.3	116.6	-	122.2	113.4	-	105.7	-	-	92.5	-	-	92
98	-	111.9	107.5	117.4	110.8	106.3	115.2	108.6	-	115.2	108.4	-	103.7	-	-	92.5	-	-	98
105	-	-	99.1	103.6	102.5	98.0	106.9	100.3	95.8	105.8	100.3	-	101.4	99.1	-	91.4	-	-	105
111	-	-	-	-	96.4	92.0	99.8	94.2	89.8	99.7	94.2	-	99.3	93.1	-	91.4	89.4	-	111
118	-	-	-	-	89.4	86.0	89.4	87.1	83.8	92.7	87.1	82.7	92.7	87.1	-	90.4	84.9	-	118
124	-	-	-	-	-	81.0	73.4	83.1	78.8	87.6	82.1	78.7	87.6	82.1	-	85.4	79.9	-	124
131	-	-	-	-	-	-	-	77.3	74.0	81.7	77.3	74.0	81.7	77.3	72.9	80.6	75.1	-	131
138	-	-	-	-	-	-	-	72.6	69.3	72.3	72.6	69.3	77.0	72.6	68.2	75.9	70.4	-	138
144	-	-	-	-	-	-	-	-	66.3	-	68.5	65.8	72.9	68.5	65.4	71.8	66.3	63.7	144
151	-	-	-	-	-	-	-	-	-	-	65.4	62.3	68.2	64.9	61.9	67.2	63.4	60.1	151
157	-	-	-	-	-	-	-	-	-	-	62.6	59.3	59.7	61.9	58.8	64.7	60.4	57.1	157
164	-	-	-	-	-	-	-	-	-	-	-	56.2	-	58.8	55.7	61.3	57.1	54.0	164
170	-	-	-	-	-	-	-	-	-	-	-	-	-	56.2	53.3	56.0	54.7	51.6	170
177	-	-	-	-	-	-	-	-	-	-	-	-	-	-	50.7	47.8	51.8	49.0	177
184	-	-	-	-	-	-	-	-	-	-	-	-	-	-	48.1	-	49.2	46.4	184
190	-	-	-	-	-	-	-	-	-	-	-	-	-	-	-	-	47.2	44.6	190
197	-	-	-	-	-	-	-	-	-	-	-	-	-	-	-	-	-	42.5	197
210	-	-	-	-	-	-	-	-	-	-	-	-	-	-	-	-	-	-	210

ft	196.9 ft			216.5 ft			236.2 ft			255.9 ft			275.6 ft			295.3 ft			ft
									1,000 lb										
72	79.3	-	-	-	-	-	-	-	-	-	-	-	-	-	-	-	-	-	72
79	79.3	-	-	65.4	-	-	-	-	-	-	-	-	-	-	-	-	-	-	79
85	79.3	-	-	65.4	-	-	56.0	-	-	-	-	-	-	-	-	-	-	-	85
92	79.3	-	-	65.4	-	-	55.9	-	-	48.0	-	-	38.7	-	-	-	-	-	92
98	79.3	-	-	65.2	-	-	55.8	-	-	47.8	-	-	38.3	-	-	30.8	-	-	98
105	79.3	-	-	65.2	-	-	55.7	-	-	47.6	-	-	37.9	-	-	30.4	-	-	105
111	79.3	-	-	65.0	-	-	55.5	-	-	47.6	-	-	37.5	-	-	30.2	-	-	111
118	79.3	73.8	-	64.8	-	-	55.5	-	-	47.1	-	-	37.0	-	-	29.7	-	-	118
124	79.3	72.8	-	64.6	-	-	55.3	-	-	46.9	-	-	36.6	-	-	29.5	-	-	124
131	79.3	71.6	-	64.3	63.0	-	55.1	-	-	46.7	-	-	36.1	-	-	29.1	-	-	131
138	74.8	69.3	-	64.1	62.5	-	54.8	54.2	-	46.2	-	-	35.7	-	-	28.6	-	-	138
144	70.7	66.3	-	63.7	62.1	-	54.6	54.0	-	45.8	46.5	-	35.2	-	-	28.2	-	-	144
151	67.2	62.7	59.2	63.4	60.8	-	54.4	53.7	-	45.4	46.5	-	34.6	-	-	27.9	-	-	151
157	63.9	59.7	56.4	62.0	57.7	-	54.2	53.3	-	45.0	46.1	-	34.2	34.2	-	27.5	-	-	157
164	60.6	56.4	53.3	58.8	54.4	51.3	54.0	52.6	-	44.5	45.8	-	33.5	33.2	-	27.1	27.5	-	164
170	58.0	53.8	50.7	56.0	52.0	48.9	53.6	50.2	-	43.9	45.4	-	33.1	32.6	-	26.7	26.9	-	170
177	54.9	50.9	48.1	53.2	49.2	46.3	51.4	47.4	44.3	43.2	44.9	-	32.4	31.9	-	26.2	26.2	-	177
184	52.2	48.6	45.7	50.6	46.6	43.7	48.8	44.8	42.0	42.5	44.2	-	31.9	31.2	-	25.7	25.7	-	184
190	46.5	46.6	43.7	48.3	44.6	41.7	46.6	42.8	40.0	41.9	42.4	39.5	31.3	30.4	-	25.3	25.1	-	190
197	39.5	44.2	41.6	45.9	42.5	39.6	44.2	40.5	37.8	40.9	40.3	37.4	30.6	29.9	30.1	24.6	24.6	-	197
210	-	40.7	38.1	37.2	38.7	36.1	40.3	37.0	34.3	39.2	36.5	33.9	29.5	28.6	28.8	23.8	23.5	24.9	210
223	-	-	35.2	-	35.5	33.0	34.4	33.7	31.3	36.6	33.3	30.8	28.0	27.5	27.3	22.9	22.7	23.8	223
236	-	-	-	-	-	30.4	25.2	30.9	28.4	32.9	30.4	28.0	26.6	26.4	26.2	22.0	21.8	22.5	236
249	-	-	-	-	-	-	-	28.2	26.0	25.3	27.8	25.6	25.1	25.5	25.1	21.1	20.9	21.4	249
262	-	-	-	-	-	-	-	-	-	-	25.4	23.4	23.8	24.7	23.0	20.5	20.0	20.5	262
275	-	-	-	-	-	-	-	-	-	-	-	21.4	17.7	23.2	21.0	19.6	19.4	19.6	275
289	-	-	-	-	-	-	-	-	-	-	-	-	-	21.1	19.1	16.6	18.7	18.2	289
302	-	-	-	-	-	-	-	-	-	-	-	-	-	-	-	-	18.0	16.7	302
315	-	-	-	-	-	-	-	-	-	-	-	-	-	-	-	-	-	15.2	315

Remarks

* incl. 13.1 ft adapter

Counterweight	132,300 lb	176,400 lb	220,500 lb	264,600 lb	308,700 lb	352,800 lb	407,900 lb

Max. capacities with minimum counterweight — Further counterweight configurations on request

Lifting capacities luffing fly jib, main boom 83° to 65°

360° DIN/ISO

91.8 ft* **Main boom**

Fly jib

Radius ft	78.7 ft 83°	78.7 ft 73°	78.7 ft 65°	98.4 ft 83°	98.4 ft 73°	98.4 ft 65°	118.1 ft 83°	118.1 ft 73°	118.1 ft 65°	137.8 ft 83°	137.8 ft 73°	137.8 ft 65°	157.5 ft 83°	157.5 ft 73°	157.5 ft 65°	177.2 ft 83°	177.2 ft 73°	177.2 ft 65°	Radius ft
									1,000 lb										
52	207.1	-	-	183.4	-	-	-	-	-	-	-	-	-	-	-	-	-	-	52
59	193.0	-	-	175.3	-	-	152.1	-	-	126.7	-	-	-	-	-	-	-	-	59
65	182.0	-	-	169.2	-	-	152.1	-	-	126.7	-	-	105.8	-	-	-	-	-	65
72	164.7	-	-	160.0	-	-	151.0	-	-	126.7	-	-	105.8	-	-	88.1	-	-	72
79	148.3	135.2	-	147.2	133.1	-	145.0	-	-	126.5	-	-	105.8	-	-	88.1	-	-	79
85	137.3	127.1	-	136.1	126.0	-	133.9	-	-	123.5	-	-	105.8	-	-	88.1	-	-	85
92	-	117.7	-	124.3	116.6	-	123.2	111.1	-	120.0	-	-	104.6	-	-	88.1	-	-	92
98	-	109.7	104.1	116.3	108.6	-	114.1	105.1	-	113.9	102.8	-	102.6	-	-	88.1	-	-	98
105	-	101.4	95.8	106.9	100.3	94.7	105.8	98.0	-	104.7	96.9	-	101.4	93.6	-	87.0	-	-	105
111	-	-	90.8	-	94.2	88.7	98.7	92.0	-	98.6	91.9	-	98.3	90.6	-	87.0	-	-	111
118	-	-	-	-	87.1	82.7	91.6	86.0	80.5	91.6	84.9	-	91.6	84.9	-	87.0	82.7	-	118
124	-	-	-	-	83.1	77.7	80.6	81.0	76.5	86.5	79.9	75.4	86.5	79.9	-	85.1	78.7	-	124
131	-	-	-	-	-	72.9	-	75.1	70.7	81.7	75.1	70.7	80.6	75.1	-	79.5	72.9	-	131
138	-	-	-	-	-	-	-	71.5	67.1	75.7	70.4	66.0	75.9	70.4	66.0	74.8	68.2	-	138
144	-	-	-	-	-	-	-	-	63.9	65.8	67.4	63.4	71.8	66.3	63.0	70.7	65.4	-	144
151	-	-	-	-	-	-	-	-	60.3	-	63.8	59.9	68.2	63.4	59.4	67.2	61.6	57.7	151
157	-	-	-	-	-	-	-	-	-	-	60.8	57.1	64.0	60.4	56.6	63.9	58.8	54.9	157
164	-	-	-	-	-	-	-	-	-	-	-	54.0	52.9	57.3	53.5	60.6	55.5	51.8	164
170	-	-	-	-	-	-	-	-	-	-	-	51.8	-	54.7	51.1	58.0	53.1	49.4	170
177	-	-	-	-	-	-	-	-	-	-	-	-	-	52.0	48.5	51.5	50.3	46.8	177
184	-	-	-	-	-	-	-	-	-	-	-	-	-	-	46.2	42.4	47.9	44.4	184
190	-	-	-	-	-	-	-	-	-	-	-	-	-	-	44.4	-	45.9	42.6	190
197	-	-	-	-	-	-	-	-	-	-	-	-	-	-	-	-	43.8	40.5	197
210	-	-	-	-	-	-	-	-	-	-	-	-	-	-	-	-	-	37.2	210
223	-	-	-	-	-	-	-	-	-	-	-	-	-	-	-	-	-	-	223

ft	196.9 ft			216.5 ft			236.2 ft			255.9 ft			275.6 ft			295.3 ft			ft
									1,000 lb										
79	76.0	-	-	59.5	-	-	-	-	-	-	-	-	-	-	-	-	-	-	79
85	76.0	-	-	59.5	-	-	50.7	-	-	-	-	-	-	-	-	-	-	-	85
92	76.0	-	-	59.5	-	-	50.7	-	-	44.9	-	-	-	-	-	-	-	-	92
98	76.0	-	-	59.5	-	-	50.7	-	-	44.9	-	-	36.1	-	-	-	-	-	98
105	76.0	-	-	59.5	-	-	50.7	-	-	44.9	-	-	35.9	-	-	28.4	-	-	105
111	76.0	-	-	59.5	-	-	50.7	-	-	44.9	-	-	35.5	-	-	28.2	-	-	111
118	76.0	-	-	59.5	-	-	50.7	-	-	44.9	-	-	35.2	-	-	28.0	-	-	118
124	76.0	69.6	-	59.5	-	-	50.7	-	-	44.9	-	-	35.0	-	-	27.8	-	-	124
131	76.0	67.3	-	59.5	59.5	-	50.7	-	-	44.9	-	-	34.6	-	-	27.5	-	-	131
138	73.7	65.6	-	59.5	58.6	-	50.7	-	-	44.9	-	-	34.3	-	-	27.3	-	-	138
144	69.6	64.2	-	59.5	58.0	-	50.7	50.5	-	44.5	-	-	33.9	-	-	26.9	-	-	144
151	66.1	61.0	-	59.5	57.3	-	50.7	50.2	-	44.3	44.0	-	33.5	-	-	26.6	-	-	151
157	63.2	58.0	54.0	59.5	56.0	-	50.7	49.8	-	44.1	43.8	-	33.1	32.0	-	26.4	-	-	157
164	59.9	54.9	50.9	58.2	52.9	-	50.7	49.3	-	43.6	43.4	-	32.6	31.3	-	26.0	-	-	164
170	57.1	52.2	48.5	55.4	50.5	47.7	50.7	48.3	-	43.2	43.2	-	32.2	30.7	-	25.7	25.4	-	170
177	54.3	49.6	46.1	52.5	47.6	44.1	50.7	45.9	-	42.7	42.9	-	31.7	30.0	-	25.3	24.9	-	177
184	51.7	47.0	43.7	49.9	45.3	41.7	48.1	43.3	39.8	42.0	42.6	-	31.2	29.2	-	24.9	24.4	-	184
190	49.4	45.0	41.7	47.7	43.3	39.7	45.9	41.3	38.0	41.6	41.0	-	30.8	28.6	-	24.7	23.8	-	190
197	42.8	42.9	39.8	45.3	41.1	37.8	43.6	39.2	35.8	40.9	38.9	35.4	30.4	28.2	-	24.2	23.3	-	197
210	-	39.4	36.3	40.1	37.4	34.3	39.8	35.7	32.4	39.4	35.2	31.9	29.3	27.1	26.8	23.5	22.4	-	210
223	-	-	33.5	-	34.2	31.3	36.4	32.4	29.5	35.9	31.9	29.1	28.2	26.0	25.3	22.7	21.6	22.9	223
236	-	-	-	-	31.5	28.7	28.5	29.5	26.7	32.9	29.1	26.2	27.1	25.1	24.0	22.0	20.7	21.6	236
249	-	-	-	-	-	26.5	-	27.1	24.5	27.4	26.7	24.0	26.0	24.2	22.9	21.1	19.8	20.5	249
262	-	-	-	-	-	-	-	-	22.3	-	24.5	21.8	24.7	23.6	21.4	20.5	19.2	19.4	262
275	-	-	-	-	-	-	-	-	-	-	22.3	19.9	19.6	22.1	19.7	19.8	18.5	18.3	275
289	-	-	-	-	-	-	-	-	-	-	-	-	-	20.2	17.8	18.3	17.8	16.9	289
302	-	-	-	-	-	-	-	-	-	-	-	-	-	-	16.2	-	17.1	15.1	302
315	-	-	-	-	-	-	-	-	-	-	-	-	-	-	-	-	-	13.8	315
328	-	-	-	-	-	-	-	-	-	-	-	-	-	-	-	-	-	-	328

Remarks

* incl. 13.1 ft adapter

Counterweight	132,300 lb	176,400 lb	220,500 lb	264,600 lb	308,700 lb	352,800 lb	407,900 lb

Max. capacities with minimum counterweight Further counterweight configurations on request

360° DIN/ISO

106.9 ft* Main boom

Fly jib

Radius ft	78.7 ft 83°	78.7 ft 73°	78.7 ft 65°	98.4 ft 83°	98.4 ft 73°	98.4 ft 65°	118.1 ft 83°	118.1 ft 73°	118.1 ft 65°	137.8 ft 83°	137.8 ft 73°	137.8 ft 65°	157.5 ft 83°	157.5 ft 73°	157.5 ft 65°	177.2 ft 83°	177.2 ft 73°	177.2 ft 65°	Radius ft
									1,000 lb										
52	184.9	-	-	165.8	-	-	-	-	-	-	-	-	-	-	-	-	-	-	52
59	172.0	-	-	157.6	-	-	138.9	-	-	-	-	-	-	-	-	-	-	-	59
65	162.8	-	-	151.6	-	-	136.8	-	-	114.8	-	-	-	-	-	-	-	-	65
72	152.3	-	-	144.5	-	-	134.5	-	-	113.5	-	-	95.9	-	-	-	-	-	72
79	143.0	-	-	136.4	-	-	129.8	-	-	113.4	-	-	94.7	-	-	80.4	-	-	79
85	135.9	113.9	-	131.3	112.7	-	124.7	-	-	111.4	-	-	94.7	-	-	80.4	-	-	85
92	124.3	106.8	-	123.2	104.6	-	117.8	-	-	107.9	-	-	94.7	-	-	80.4	-	-	92
98	-	101.8	-	115.2	99.6	-	112.8	92.8	-	104.8	-	-	92.7	-	-	79.3	-	-	98
105	-	99.2	87.0	106.9	94.7	-	104.7	88.1	-	100.3	84.8	-	90.3	-	-	79.3	-	-	105
111	-	-	83.0	95.8	90.7	80.7	97.6	85.1	-	96.2	80.8	-	89.3	79.6	-	78.3	-	-	111
118	-	-	80.5	-	86.0	77.2	91.5	81.6	-	91.5	77.2	-	87.1	76.1	-	77.1	-	-	118
124	-	-	-	-	81.0	73.2	86.4	78.4	69.9	85.5	74.1	-	85.1	73.0	-	77.1	69.9	-	124
131	-	-	-	-	-	70.6	-	74.0	66.2	80.6	71.7	-	80.6	70.6	-	76.0	67.3	-	131
138	-	-	-	-	-	67.1	-	69.3	64.3	75.8	68.2	60.5	75.9	67.1	-	73.7	64.9	-	138
144	-	-	-	-	-	-	-	66.3	62.0	70.8	66.0	58.3	71.8	65.7	58.5	69.6	62.7	-	144
151	-	-	-	-	-	-	-	-	58.6	-	62.5	55.7	67.2	62.1	55.9	66.1	60.1	-	151
157	-	-	-	-	-	-	-	-	55.7	-	59.5	54.3	64.9	59.3	54.1	63.4	57.5	52.1	157
164	-	-	-	-	-	-	-	-	-	-	56.4	52.2	57.1	56.0	51.8	59.9	54.2	49.8	164
170	-	-	-	-	-	-	-	-	-	-	-	50.0	-	53.5	49.6	57.3	51.8	47.8	170
177	-	-	-	-	-	-	-	-	-	-	-	47.6	-	50.9	47.0	54.5	49.2	45.2	177
184	-	-	-	-	-	-	-	-	-	-	-	-	-	48.4	44.6	46.6	46.8	42.9	184
190	-	-	-	-	-	-	-	-	-	-	-	-	-	-	42.8	-	44.8	41.0	190
197	-	-	-	-	-	-	-	-	-	-	-	-	-	-	40.9	-	42.7	39.2	197
210	-	-	-	-	-	-	-	-	-	-	-	-	-	-	-	-	-	35.7	210
223	-	-	-	-	-	-	-	-	-	-	-	-	-	-	-	-	-	-	223

ft	196.9 ft 83°	196.9 ft 73°	196.9 ft 65°	216.5 ft 83°	216.5 ft 73°	216.5 ft 65°	236.2 ft 83°	236.2 ft 73°	236.2 ft 65°	255.9 ft 83°	255.9 ft 73°	255.9 ft 65°	275.6 ft 83°	275.6 ft 73°	275.6 ft 65°	295.3 ft 83°	295.3 ft 73°	295.3 ft 65°	ft
									1,000 lb										
79	70.5	-	-	-	-	-	-	-	-	-	-	-	-	-	-	-	-	-	79
85	70.5	-	-	55.9	-	-	-	-	-	-	-	-	-	-	-	-	-	-	85
92	70.5	-	-	55.9	-	-	47.3	-	-	-	-	-	-	-	-	-	-	-	92
98	69.5	-	-	55.7	-	-	47.1	-	-	41.6	-	-	-	-	-	-	-	-	98
105	69.4	-	-	55.5	-	-	47.1	-	-	41.6	-	-	33.5	-	-	-	-	-	105
111	69.4	-	-	55.3	-	-	46.9	-	-	41.6	-	-	33.3	-	-	26.4	-	-	111
118	68.3	-	-	55.1	-	-	46.9	-	-	41.4	-	-	33.0	-	-	26.2	-	-	118
124	68.3	-	-	54.9	-	-	46.7	-	-	41.4	-	-	32.6	-	-	26.0	-	-	124
131	68.3	61.1	-	54.6	-	-	46.7	-	-	41.2	-	-	32.4	-	-	25.8	-	-	131
138	67.2	59.0	-	54.6	52.8	-	46.5	-	-	41.2	-	-	32.1	-	-	25.7	-	-	138
144	67.2	57.4	-	54.4	52.0	-	46.3	-	-	41.0	-	-	31.9	-	-	25.5	-	-	144
151	65.8	55.3	-	54.2	51.1	-	46.2	44.7	-	40.7	-	-	31.7	-	-	25.3	-	-	151
157	62.6	53.9	-	54.0	50.1	-	46.0	43.9	-	40.5	39.2	-	31.5	-	-	24.9	-	-	157
164	59.3	52.2	-	53.7	48.9	-	46.0	43.2	-	40.3	39.2	-	31.3	28.8	-	24.6	-	-	164
170	56.6	51.0	46.2	53.1	47.7	-	45.8	42.4	-	40.1	39.0	-	30.9	28.2	-	24.4	-	-	170
177	53.8	48.3	44.1	52.0	46.5	-	45.6	41.4	-	39.9	38.8	-	30.6	27.7	-	24.2	22.9	-	177
184	51.0	45.9	42.0	49.2	44.2	40.2	45.1	40.5	-	39.4	38.1	-	30.4	27.0	-	24.0	22.4	-	184
190	49.0	43.9	40.2	47.2	42.2	38.2	44.7	39.7	36.2	39.2	37.7	-	30.2	26.6	-	23.8	22.0	-	190
197	46.3	41.8	38.3	44.9	40.0	36.3	43.1	38.1	34.3	38.7	37.0	-	29.7	26.0	-	23.5	21.5	-	197
210	-	38.3	35.0	40.9	36.3	33.0	39.2	34.6	31.0	37.9	34.1	30.6	29.0	25.1	-	22.9	20.7	-	210
223	-	35.2	31.9	31.1	33.3	30.0	35.9	31.5	28.0	35.5	31.1	27.5	28.4	24.2	22.7	22.4	20.0	-	223
236	-	-	29.5	-	30.6	27.3	30.7	28.7	25.6	32.6	28.2	24.9	27.5	23.3	21.1	21.8	19.1	20.3	236
249	-	-	-	-	-	25.1	-	26.2	23.2	29.1	25.8	22.7	26.6	22.5	20.0	21.3	18.5	19.2	249
262	-	-	-	-	-	-	-	24.1	21.2	20.8	23.6	20.5	25.8	21.8	18.9	20.7	17.8	17.9	262
275	-	-	-	-	-	-	-	-	19.4	-	21.6	18.8	21.1	21.1	18.1	20.0	17.2	16.8	275
289	-	-	-	-	-	-	-	-	-	-	-	16.9	-	19.3	16.7	19.2	16.7	15.6	289
302	-	-	-	-	-	-	-	-	-	-	-	-	-	-	15.1	-	16.0	14.3	302
315	-	-	-	-	-	-	-	-	-	-	-	-	-	-	-	-	15.4	12.7	315
328	-	-	-	-	-	-	-	-	-	-	-	-	-	-	-	-	-	11.6	328

Remarks

* incl. 13.1 ft adapter

Counterweight 132,300 lb 176,400 lb 220,500 lb 264,600 lb 308,700 lb 352,800 lb 407,900 lb

Max. capacities with minimum counterweight Further counterweight configurations on request

Lifting capacities luffing fly jib, main boom 83° to 65°

360° DIN/ISO

122.0 ft* Main boom

Fly jib

Radius ft	78.7 ft 83°	78.7 ft 73°	78.7 ft 65°	98.4 ft 83°	98.4 ft 73°	98.4 ft 65°	118.1 ft 83°	118.1 ft 73°	118.1 ft 65°	137.8 ft 83°	137.8 ft 73°	137.8 ft 65°	157.5 ft 83°	157.5 ft 73°	157.5 ft 65°	177.2 ft 83°	177.2 ft 73°	177.2 ft 65°	Radius ft
									1,000 lb										
59	155.5	-	-	140.0	-	-	-	-	-	-	-	-	-	-	-	-	-	-	59
65	146.3	-	-	134.0	-	-	123.8	-	-	-	-	-	-	-	-	-	-	-	65
72	136.9	-	-	126.9	-	-	119.1	-	-	102.5	-	-	85.9	-	-	-	-	-	72
79	129.8	-	-	121.0	-	-	114.4	-	-	101.3	-	-	85.8	-	-	73.8	-	-	79
85	124.8	-	-	117.0	-	-	110.4	-	-	99.3	-	-	84.8	-	-	73.8	-	-	85
92	122.3	95.8	-	112.3	94.6	-	105.7	-	-	95.8	-	-	83.7	-	-	72.7	-	-	92
98	-	90.8	-	109.2	88.6	-	101.7	-	-	92.8	-	-	82.8	-	-	71.7	-	-	98
105	-	88.1	-	105.8	83.7	-	96.9	78.2	-	89.2	-	-	80.4	-	-	71.6	-	-	105
111	-	85.1	73.0	99.7	79.7	-	93.9	75.2	-	86.1	70.7	-	79.4	-	-	70.6	-	-	111
118	-	-	69.5	-	77.1	67.2	90.4	71.7	-	82.7	67.2	-	77.1	67.2	-	69.4	-	-	118
124	-	-	66.4	-	75.1	64.6	85.4	69.6	-	80.6	65.0	-	76.1	65.4	-	68.4	-	-	124
131	-	-	-	-	73.8	61.8	73.2	67.3	58.2	77.2	62.6	-	73.9	62.7	-	67.3	59.6	-	131
138	-	-	-	-	-	59.2	-	66.1	55.4	74.8	60.3	-	71.5	60.1	-	66.1	56.8	-	138
144	-	-	-	-	-	57.8	-	65.5	53.6	71.7	58.9	49.7	69.5	58.3	-	65.9	54.5	-	144
151	-	-	-	-	-	-	-	61.9	51.7	60.7	57.3	47.3	67.2	56.1	48.4	64.7	52.2	-	151
157	-	-	-	-	-	-	-	-	50.7	-	56.5	45.7	64.5	54.7	46.6	62.9	50.4	-	157
164	-	-	-	-	-	-	-	-	49.6	-	55.5	43.8	61.3	53.3	44.5	59.5	48.5	42.5	164
170	-	-	-	-	-	-	-	-	-	-	53.1	43.0	-	52.5	43.1	56.9	47.3	40.9	170
177	-	-	-	-	-	-	-	-	-	-	-	41.9	-	50.1	41.7	54.0	45.6	39.2	177
184	-	-	-	-	-	-	-	-	-	-	-	41.4	-	47.7	40.5	50.1	44.7	37.6	184
190	-	-	-	-	-	-	-	-	-	-	-	-	-	-	39.7	-	43.9	36.4	190
197	-	-	-	-	-	-	-	-	-	-	-	-	-	-	39.2	-	41.8	35.2	197
210	-	-	-	-	-	-	-	-	-	-	-	-	-	-	-	-	-	33.5	210
223	-	-	-	-	-	-	-	-	-	-	-	-	-	-	-	-	-	31.9	223
236	-	-	-	-	-	-	-	-	-	-	-	-	-	-	-	-	-	-	236

ft	196.9 ft			216.5 ft			236.2 ft			255.9 ft			275.6 ft			295.3 ft			ft
									1,000 lb										
85	66.1	-	-	-	-	-	-	-	-	-	-	-	-	-	-	-	-	-	85
92	65.8	-	-	52.4	-	-	-	-	-	-	-	-	-	-	-	-	-	-	92
98	65.2	-	-	52.2	-	-	43.8	-	-	-	-	-	-	-	-	-	-	-	98
105	64.3	-	-	51.8	-	-	43.6	-	-	38.1	-	-	30.8	-	-	-	-	-	105
111	63.7	-	-	51.6	-	-	43.4	-	-	37.9	-	-	30.8	-	-	24.7	-	-	111
118	63.0	-	-	51.1	-	-	43.2	-	-	37.9	-	-	30.6	-	-	24.4	-	-	118
124	62.4	-	-	50.7	-	-	43.0	-	-	37.7	-	-	30.4	-	-	24.2	-	-	124
131	61.9	-	-	50.4	-	-	42.7	-	-	37.6	-	-	30.2	-	-	24.2	-	-	131
138	61.2	54.1	-	50.0	-	-	42.5	-	-	37.4	-	-	29.9	-	-	24.0	-	-	138
144	60.6	52.1	-	49.8	47.7	-	42.3	-	-	37.4	-	-	29.9	-	-	23.8	-	-	144
151	60.1	50.0	-	49.3	46.0	-	42.1	-	-	37.2	-	-	29.7	-	-	23.8	-	-	151
157	59.3	48.4	-	48.9	44.6	-	41.9	40.0	-	37.2	-	-	29.5	-	-	23.6	-	-	157
164	58.4	46.7	-	48.7	43.0	-	41.8	38.6	-	37.0	35.2	-	29.5	-	-	23.3	-	-	164
170	56.2	45.3	-	48.3	41.7	-	41.6	37.8	-	37.0	34.8	-	29.3	26.5	-	23.3	-	-	170
177	53.4	43.6	38.6	47.8	40.3	-	41.4	36.6	-	36.8	34.6	-	29.1	25.8	-	23.1	-	-	177
184	50.8	42.5	36.9	47.3	38.9	-	41.2	35.4	-	36.5	33.9	-	29.0	25.3	-	22.9	20.9	-	184
190	48.6	41.4	35.7	46.7	37.9	33.1	41.0	34.6	-	36.5	33.3	-	28.8	24.9	-	22.9	20.5	-	190
197	46.4	40.5	34.5	44.4	36.7	31.7	40.5	33.7	-	36.3	32.6	-	28.8	24.2	-	22.7	20.0	-	197
210	-	37.6	32.1	40.7	34.8	29.3	39.0	31.9	27.1	35.9	30.8	25.3	28.6	23.3	-	22.4	19.3	-	210
223	-	34.6	30.6	34.4	32.6	27.5	35.5	30.6	24.9	35.2	29.1	23.8	28.2	22.4	20.5	22.0	18.7	-	223
236	-	-	28.4	-	29.8	26.2	32.6	28.0	23.3	32.2	27.3	22.5	27.5	21.8	19.2	21.6	18.0	19.6	236
249	-	-	-	-	-	24.3	-	25.6	22.2	29.6	25.1	20.9	26.9	21.1	17.8	21.3	17.4	18.1	249
262	-	-	-	-	-	22.3	-	23.4	20.1	22.7	23.0	19.6	26.4	20.5	16.5	20.7	16.7	17.0	262
275	-	-	-	-	-	-	-	-	18.3	-	21.0	17.9	22.6	20.0	15.6	20.3	16.3	15.9	275
289	-	-	-	-	-	-	-	-	-	-	-	16.0	-	18.7	14.7	19.5	15.8	14.7	289
302	-	-	-	-	-	-	-	-	-	-	-	-	-	-	13.8	-	15.2	13.4	302
315	-	-	-	-	-	-	-	-	-	-	-	-	-	-	13.0	-	14.5	11.9	315
328	-	-	-	-	-	-	-	-	-	-	-	-	-	-	-	-	-	10.8	328
341	-	-	-	-	-	-	-	-	-	-	-	-	-	-	-	-	-	-	341

Remarks

* incl. 13.1 ft adapter

Counterweight 132,300 lb 176,400 lb 220,500 lb 264,600 lb 308,700 lb 352,800 lb 407,900 lb

Max. capacities with minimum counterweight Further counterweight configurations on request

360° DIN/ISO

137.4 ft* Main boom

Fly jib

Radius ft	78.7 ft 83°	78.7 ft 73°	78.7 ft 65°	98.4 ft 83°	98.4 ft 73°	98.4 ft 65°	118.1 ft 83°	118.1 ft 73°	118.1 ft 65°	137.8 ft 83°	137.8 ft 73°	137.8 ft 65°	157.5 ft 83°	157.5 ft 73°	157.5 ft 65°	177.2 ft 83°	177.2 ft 73°	177.2 ft 65°	Radius ft
									1,000 lb										
59	130.1	-	-	117.9	-	-	-	-	-	-	-	-	-	-	-	-	-	-	59
65	122.9	-	-	113.0	-	-	106.2	-	-	-	-	-	-	-	-	-	-	-	65
72	114.8	-	-	108.1	-	-	101.5	-	-	88.2	-	-	-	-	-	-	-	-	72
79	107.8	-	-	102.5	-	-	96.8	-	-	85.8	-	-	73.8	-	-	-	-	-	79
85	102.8	-	-	98.3	-	-	92.7	-	-	83.8	-	-	72.8	-	-	64.3	-	-	85
92	99.1	-	-	93.6	-	-	89.1	-	-	80.4	-	-	71.6	-	-	63.6	-	-	92
98	-	76.3	-	90.6	75.2	-	86.1	-	-	78.4	-	-	70.5	-	-	63.0	-	-	98
105	-	72.7	-	88.1	70.5	-	82.6	64.5	-	76.0	-	-	69.4	-	-	62.1	-	-	105
111	-	69.7	-	86.1	66.5	-	79.6	61.9	-	73.0	-	-	67.4	-	-	61.3	-	-	111
118	-	68.3	-	-	64.4	-	77.1	59.3	-	70.5	55.8	-	66.1	-	-	60.2	-	-	118
124	-	-	55.4	-	61.8	-	75.1	57.1	-	68.5	53.6	-	65.1	53.5	-	59.1	-	-	124
131	-	-	53.4	-	60.4	51.0	73.8	55.1	-	66.2	51.2	-	63.5	51.2	-	58.0	-	-	131
138	-	-	-	-	59.0	48.4	-	53.3	45.3	64.5	48.9	-	61.9	48.8	-	56.8	46.4	-	138
144	-	-	-	-	-	47.0	-	52.5	43.5	63.3	47.6	-	60.6	47.2	-	55.6	44.6	-	144
151	-	-	-	-	-	45.3	-	51.3	41.6	61.7	46.0	38.7	59.0	45.3	-	54.4	42.5	-	151
157	-	-	-	-	-	-	-	51.1	40.6	-	45.2	37.1	57.6	44.1	-	53.2	41.1	-	157
164	-	-	-	-	-	-	-	-	39.2	-	44.1	35.2	56.0	42.9	36.6	51.8	39.4	-	164
170	-	-	-	-	-	-	-	-	38.8	-	43.8	34.2	54.3	42.1	35.3	50.8	38.2	-	170
177	-	-	-	-	-	-	-	-	-	-	43.6	33.0	-	41.2	33.7	49.4	37.0	31.5	177
184	-	-	-	-	-	-	-	-	-	-	-	32.6	-	40.7	32.8	47.8	36.1	30.1	184
190	-	-	-	-	-	-	-	-	-	-	-	32.2	-	40.3	31.7	44.0	35.3	28.9	190
197	-	-	-	-	-	-	-	-	-	-	-	-	-	-	31.0	-	34.8	27.7	197
210	-	-	-	-	-	-	-	-	-	-	-	-	-	-	30.2	-	34.1	26.0	210
223	-	-	-	-	-	-	-	-	-	-	-	-	-	-	-	-	-	24.9	223
236	-	-	-	-	-	-	-	-	-	-	-	-	-	-	-	-	-	-	236

ft	196.9 ft			216.5 ft			236.2 ft			255.9 ft			275.6 ft			295.3 ft			ft
									1,000 lb						-				
85	58.2	-	-	-	-	-	-	-	-	-	-	-	-	-	-	-	-	-	85
92	57.3	-	-	46.0	-	-	-	-	-	-	-	-	-	-	-	-	-	-	92
98	56.4	-	-	45.6	-	-	38.3	-	-	-	-	-	-	-	-	-	-	-	98
105	55.7	-	-	45.1	-	-	38.1	-	-	32.8	-	-	-	-	-	-	-	-	105
111	55.1	-	-	44.7	-	-	37.7	-	-	32.6	-	-	26.4	-	-	-	-	-	111
118	54.2	-	-	44.3	-	-	37.4	-	-	32.6	-	-	26.2	-	-	20.7	-	-	118
124	53.6	-	-	43.9	-	-	37.2	-	-	32.4	-	-	26.0	-	-	20.7	-	-	124
131	52.9	-	-	43.6	-	-	37.0	-	-	32.1	-	-	25.8	-	-	20.5	-	-	131
138	52.2	-	-	43.1	-	-	36.8	-	-	32.1	-	-	25.5	-	-	20.4	-	-	138
144	51.4	42.6	-	42.7	-	-	36.6	-	-	31.9	-	-	25.5	-	-	20.2	-	-	144
151	50.6	40.9	-	42.5	37.4	-	36.3	-	-	31.7	-	-	25.3	-	-	20.2	-	-	151
157	49.8	39.5	-	42.1	36.2	-	36.1	-	-	31.7	-	-	25.3	-	-	20.0	-	-	157
164	48.9	37.9	-	41.6	34.6	-	35.9	31.5	-	31.5	-	-	25.1	-	-	20.0	-	-	164
170	48.1	36.7	-	41.2	33.4	-	35.7	30.3	-	31.5	27.8	-	25.1	-	-	19.8	-	-	170
177	47.2	35.3	-	40.7	32.0	-	35.4	29.1	-	31.3	26.9	-	24.9	20.9	-	19.8	-	-	177
184	46.0	34.1	29.4	40.3	30.8	-	35.2	28.1	-	31.2	26.1	-	24.9	20.4	-	19.6	-	-	184
190	45.0	33.3	28.2	39.7	29.8	-	34.8	27.1	-	31.0	25.3	-	24.7	20.0	-	19.6	16.7	-	190
197	43.8	32.3	26.8	39.2	28.8	24.6	34.6	26.2	-	30.8	24.6	-	24.6	19.6	-	19.3	16.5	-	197
210	37.9	30.8	24.9	37.9	27.3	22.7	33.9	24.6	20.2	30.4	23.3	-	24.4	18.7	-	19.1	15.6	-	210
223	-	29.9	23.3	36.3	26.0	20.9	32.8	23.3	18.7	29.9	22.0	17.2	24.2	18.0	-	18.9	14.9	-	223
236	-	-	22.2	-	25.3	19.6	31.9	22.2	17.2	29.1	20.9	15.8	24.0	17.2	14.3	18.7	14.3	-	236
249	-	-	21.8	-	24.7	18.7	23.8	21.6	16.1	28.2	19.8	14.8	23.8	16.7	13.0	18.5	13.6	-	249
262	-	-	-	-	-	18.1	-	20.9	15.0	24.3	18.9	13.9	23.3	16.1	12.1	18.3	13.2	-	262
275	-	-	-	-	-	-	-	-	14.3	-	18.1	13.0	22.9	15.6	11.0	18.0	12.8	-	275
289	-	-	-	-	-	-	-	-	13.8	-	17.4	12.3	-	15.2	10.3	17.5	12.3	-	289
302	-	-	-	-	-	-	-	-	-	-	-	11.8	-	14.9	9.6	15.1	11.9	-	302
315	-	-	-	-	-	-	-	-	-	-	-	-	-	-	9.2	-	11.6	-	315

Remarks

* incl. 13.1 ft adapter

Counterweight	132,300 lb	176,400 lb	220,500 lb	264,600 lb	308,700 lb	352,800 lb	407,900 lb

Max. capacities with minimum counterweight

Further counterweight configurations on request

Lifting capacities luffing fly jib, main boom 83° to 65°

360° DIN/ISO

152.5 ft* Main boom

Fly jib

Radius ft	78.7 ft 83°	78.7 ft 73°	78.7 ft 65°	98.4 ft 83°	98.4 ft 73°	98.4 ft 65°	118.1 ft 83°	118.1 ft 73°	118.1 ft 65°	137.8 ft 83°	137.8 ft 73°	137.8 ft 65°	157.5 ft 83°	157.5 ft 73°	157.5 ft 65°	177.2 ft 83°	177.2 ft 73°	177.2 ft 65°	Radius ft
									1,000 lb										
65	102.0	-	-	94.1	-	-	-	-	-	-	-	-	-	-	-	-	-	-	65
72	96.0	-	-	89.4	-	-	82.7	-	-	-	-	-	-	-	-	-	-	-	72
79	90.2	-	-	84.7	-	-	79.1	-	-	69.3	-	-	63.2	-	-	-	-	-	79
85	85.1	-	-	80.6	-	-	75.1	-	-	67.3	-	-	61.8	-	-	54.0	-	-	85
92	81.4	-	-	77.0	-	-	72.6	-	-	65.2	-	-	60.1	-	-	53.1	-	-	92
98	-	63.9	-	73.9	-	-	69.5	-	-	63.4	-	-	58.9	-	-	52.3	-	-	98
105	-	60.6	-	71.6	59.0	-	67.2	-	-	61.5	-	-	57.3	-	-	51.1	-	-	105
111	-	57.8	-	69.6	56.0	-	65.8	50.6	-	59.6	-	-	56.1	-	-	50.3	-	-	111
118	-	56.0	-	-	53.1	-	64.1	48.3	-	58.2	-	-	54.6	-	-	49.1	-	-	118
124	-	-	-	-	50.9	-	62.7	46.1	-	56.7	43.8	-	53.4	-	-	48.1	-	-	124
131	-	-	43.9	-	49.2	-	61.7	44.3	-	55.5	41.7	-	52.2	41.2	-	47.2	-	-	131
138	-	-	41.8	-	47.5	39.8	-	42.7	-	54.4	39.6	-	50.8	39.4	-	46.0	-	-	138
144	-	-	-	-	-	38.2	-	41.7	34.9	53.6	38.2	-	50.0	38.0	-	45.2	36.0	-	144
151	-	-	-	-	-	36.3	-	40.5	33.7	52.6	36.8	-	48.9	36.5	-	44.3	34.3	-	151
157	-	-	-	-	-	35.5	-	40.3	32.0	-	36.0	30.0	48.3	35.3	-	43.4	33.1	-	157
164	-	-	-	-	-	-	-	-	30.8	-	35.0	28.4	47.4	34.1	-	42.7	31.7	-	164
170	-	-	-	-	-	-	-	-	30.2	-	34.6	27.2	46.9	33.5	28.5	42.1	30.7	-	170
177	-	-	-	-	-	-	-	-	29.7	-	34.1	26.0	-	32.6	27.3	41.4	29.7	-	177
184	-	-	-	-	-	-	-	-	-	-	-	25.3	-	32.1	26.1	41.2	28.8	23.9	184
190	-	-	-	-	-	-	-	-	-	-	-	24.7	-	31.7	25.3	40.8	28.0	22.7	190
197	-	-	-	-	-	-	-	-	-	-	-	24.4	-	31.5	24.6	-	27.5	21.8	197
210	-	-	-	-	-	-	-	-	-	-	-	-	-	-	23.3	-	26.6	19.8	210
223	-	-	-	-	-	-	-	-	-	-	-	-	-	-	-	-	-	18.7	223
236	-	-	-	-	-	-	-	-	-	-	-	-	-	-	-	-	-	17.8	236
249	-	-	-	-	-	-	-	-	-	-	-	-	-	-	-	-	-	-	249

ft	196.9 ft			216.5 ft			236.2 ft			255.9 ft			275.6 ft			295.3 ft			ft
									1,000 lb										
92	47.6	-	-	-	-	-	-	-	-	-	-	-	-	-	-	-	-	-	92
98	46.9	-	-	39.2	-	-	-	-	-	-	-	-	-	-	-	-	-	-	98
105	46.0	-	-	38.5	-	-	32.6	-	-	-	-	-	-	-	-	-	-	-	105
111	45.2	-	-	38.1	-	-	32.4	-	-	28.2	-	-	22.2	-	-	-	-	-	111
118	44.3	-	-	37.7	-	-	31.9	-	-	28.0	-	-	22.0	-	-	16.9	-	-	118
124	43.7	-	-	37.3	-	-	31.7	-	-	27.8	-	-	22.0	-	-	16.9	-	-	124
131	42.8	-	-	36.6	-	-	31.5	-	-	27.5	-	-	21.8	-	-	16.7	-	-	131
138	42.0	-	-	36.1	-	-	31.0	-	-	27.3	-	-	21.5	-	-	16.7	-	-	138
144	41.2	-	-	35.7	-	-	30.8	-	-	27.1	-	-	21.3	-	-	16.7	-	-	144
151	40.5	33.2	-	35.2	-	-	30.4	-	-	26.8	-	-	21.3	-	-	16.7	-	-	151
157	39.9	32.0	-	34.8	29.4	-	30.2	-	-	26.6	-	-	21.1	-	-	16.5	-	-	157
164	39.2	30.6	-	34.3	28.0	-	29.9	-	-	26.4	-	-	20.9	-	-	16.5	-	-	164
170	38.8	29.6	-	34.1	26.7	-	29.7	24.5	-	26.2	-	-	20.9	-	-	16.5	-	-	170
177	38.5	28.4	-	33.7	25.6	-	29.3	23.3	-	26.0	21.8	-	20.7	-	-	16.5	-	-	177
184	38.1	27.3	-	33.4	24.4	-	29.0	22.2	-	25.7	20.8	-	20.7	16.5	-	16.3	-	-	184
190	37.9	26.4	-	33.0	23.4	-	28.8	21.2	-	25.5	19.8	-	20.7	16.1	-	16.3	-	-	190
197	37.4	25.5	20.9	32.8	22.4	-	28.6	20.2	-	25.3	19.1	-	20.5	15.6	-	16.3	13.4	-	197
210	36.8	24.2	18.7	32.4	20.9	16.9	28.4	18.7	-	24.9	17.6	-	20.2	14.9	-	16.3	12.5	-	210
223	-	23.1	17.2	32.1	19.8	15.4	28.0	17.2	12.7	24.6	16.1	-	20.2	14.3	-	16.0	11.9	-	223
236	-	22.2	16.3	-	19.1	14.1	27.7	16.3	11.9	24.4	15.0	10.8	20.0	13.6	-	16.0	11.2	-	236
249	-	-	15.8	-	18.7	13.2	25.8	15.4	10.8	24.2	14.1	9.7	20.0	13.0	9.2	15.8	10.8	-	249
262	-	-	-	-	-	12.5	-	15.2	10.1	23.8	13.2	8.8	19.8	12.5	8.1	15.8	10.1	-	262
275	-	-	-	-	-	12.3	-	15.0	9.5	-	12.8	8.1	19.6	12.1	7.3	15.8	9.9	-	275
289	-	-	-	-	-	-	-	-	9.0	-	12.3	7.4	17.3	11.6	6.6	15.6	9.4	-	289
302	-	-	-	-	-	-	-	-	-	-	-	7.2	-	11.4	6.1	14.7	9.2	-	302
315	-	-	-	-	-	-	-	-	-	-	-	-	-	-	5.7	-	9.0	-	315
328	-	-	-	-	-	-	-	-	-	-	-	-	-	-	5.5	-	8.8	-	328

Remarks

* incl. 13.1 ft adapter

Counterweight	132,300 lb	176,400 lb	220,500 lb	264,600 lb	308,700 lb	352,800 lb	407,900 lb

Max. capacities with minimum counterweight

Further counterweight configurations on request

360° DIN/ISO

168.0 ft* Main boom

Fly jib

Radius ft	78.7 ft 83°	78.7 ft 73°	78.7 ft 65°	98.4 ft 83°	98.4 ft 73°	98.4 ft 65°	118.1 ft 83°	118.1 ft 73°	118.1 ft 65°	137.8 ft 83°	137.8 ft 73°	137.8 ft 65°	157.5 ft 83°	157.5 ft 73°	157.5 ft 65°	177.2 ft 83°	177.2 ft 73°	177.2 ft 65°	Radius ft
									1,000 lb										
65	85.2	-	-	77.5	-	-	-	-	-	-	-	-	-	-	-	-	-	-	65
72	79.5	-	-	72.8	-	-	67.3	-	-	-	-	-	-	-	-	-	-	-	72
79	74.8	-	-	69.3	-	-	65.3	-	-	55.4	-	-	-	-	-	-	-	-	79
85	71.8	-	-	66.3	-	-	63.1	-	-	53.6	-	-	49.6	-	-	-	-	-	85
92	68.2	-	-	64.1	-	-	60.8	-	-	51.7	-	-	48.4	-	-	44.0	-	-	92
98	66.2	-	-	61.9	-	-	58.5	-	-	50.3	-	-	47.4	-	-	43.2	-	-	98
105	-	49.3	-	59.9	-	-	56.4	-	-	48.9	-	-	46.2	-	-	42.3	-	-	105
111	-	46.9	-	58.3	45.4	-	54.6	-	-	47.7	-	-	45.4	-	-	41.5	-	-	111
118	-	45.2	-	57.3	43.0	-	52.9	38.8	-	46.5	-	-	44.3	-	-	40.5	-	-	118
124	-	43.6	-	-	41.0	-	51.5	37.0	-	45.5	-	-	43.5	-	-	39.7	-	-	124
131	-	-	-	-	39.2	-	50.5	35.3	-	44.3	32.4	-	42.5	-	-	38.8	-	-	131
138	-	-	-	-	37.6	-	49.5	33.7	-	43.4	30.8	-	41.4	30.8	-	37.8	-	-	138
144	-	-	-	-	37.0	30.7	-	32.8	-	42.8	29.6	-	40.8	29.6	-	37.0	-	-	144
151	-	-	-	-	-	29.0	-	31.7	-	42.1	28.4	-	39.8	28.2	-	36.3	26.0	-	151
157	-	-	-	-	-	28.2	-	31.3	25.2	41.4	27.6	-	39.2	27.4	-	35.5	24.9	-	157
164	-	-	-	-	-	27.1	-	30.8	24.0	-	26.6	-	38.5	26.2	-	34.8	23.8	-	164
170	-	-	-	-	-	-	-	-	23.2	-	26.0	20.4	37.9	25.4	-	34.4	23.0	-	170
177	-	-	-	-	-	-	-	-	22.5	-	25.5	19.4	-	24.7	20.3	33.7	22.0	-	177
184	-	-	-	-	-	-	-	-	22.0	-	25.3	18.7	-	24.2	19.3	33.2	21.3	-	184
190	-	-	-	-	-	-	-	-	-	-	-	18.1	-	23.8	18.7	33.0	20.7	16.7	190
197	-	-	-	-	-	-	-	-	-	-	-	17.8	-	23.5	18.0	-	20.2	15.8	197
210	-	-	-	-	-	-	-	-	-	-	-	-	-	-	16.7	-	19.6	13.8	210
223	-	-	-	-	-	-	-	-	-	-	-	-	-	-	16.0	-	19.1	12.7	223
236	-	-	-	-	-	-	-	-	-	-	-	-	-	-	-	-	-	11.9	236
249	-	-	-	-	-	-	-	-	-	-	-	-	-	-	-	-	-	-	249

ft	196.9 ft 83°	196.9 ft 73°	196.9 ft 65°	216.5 ft 83°	216.5 ft 73°	216.5 ft 65°	236.2 ft 83°	236.2 ft 73°	236.2 ft 65°	255.9 ft 83°	255.9 ft 73°	255.9 ft 65°	275.6 ft 83°	275.6 ft 73°	275.6 ft 65°	295.3 ft 83°	295.3 ft 73°	295.3 ft 65°	ft
									1,000 lb										
98	38.8	-	-	31.5	-	-	-	-	-	-	-	-	-	-	-	-	-	-	98
105	37.9	-	-	30.8	-	-	25.7	-	-	-	-	-	-	-	-	-	-	-	105
111	37.3	-	-	30.4	-	-	25.3	-	-	21.1	-	-	-	-	-	-	-	-	111
118	36.6	-	-	29.9	-	-	25.1	-	-	20.9	-	-	18.0	-	-	-	-	-	118
124	36.0	-	-	29.5	-	-	24.7	-	-	20.7	-	-	17.8	-	-	13.8	-	-	124
131	35.2	-	-	28.9	-	-	24.2	-	-	20.5	-	-	17.6	-	-	13.6	-	-	131
138	34.3	-	-	28.4	-	-	24.0	-	-	20.2	-	-	17.6	-	-	13.6	-	-	138
144	33.7	-	-	28.0	-	-	23.6	-	-	20.0	-	-	17.4	-	-	13.6	-	-	144
151	33.0	-	-	27.7	-	-	23.3	-	-	19.8	-	-	17.1	-	-	13.6	-	-	151
157	32.4	24.5	-	27.3	-	-	23.1	-	-	19.6	-	-	16.9	-	-	13.4	-	-	157
164	31.9	23.3	-	26.8	20.5	-	22.7	-	-	19.4	-	-	16.9	-	-	13.4	-	-	164
170	31.3	22.3	-	26.4	19.7	-	22.5	-	-	19.2	-	-	16.7	-	-	13.4	-	-	170
177	30.8	21.4	-	26.2	18.5	-	22.2	14.5	-	18.9	-	-	16.5	-	-	13.4	-	-	177
184	30.6	20.4	-	25.7	17.6	-	22.0	13.8	-	18.7	-	-	16.5	-	-	13.4	-	-	184
190	30.2	19.6	-	25.5	16.7	-	21.8	13.4	-	18.5	-	-	16.3	-	-	13.2	-	-	190
197	29.7	18.9	-	25.3	16.0	-	21.5	12.7	-	18.2	-	-	16.3	-	-	13.2	-	-	197
210	29.1	17.6	13.2	24.9	14.7	-	21.1	11.9	-	18.0	-	-	16.0	-	-	13.2	-	-	210
223	-	16.7	12.1	24.4	13.6	-	20.7	11.0	-	17.6	-	-	15.8	-	-	13.2	-	-	223
236	-	16.3	11.0	-	13.0	-	20.5	10.3	-	17.4	-	-	15.6	-	-	13.2	-	-	236
249	-	-	10.5	-	12.5	-	20.2	9.9	-	17.4	-	-	15.6	-	-	13.0	-	-	249
262	-	-	10.1	-	12.5	-	-	9.4	-	17.2	-	-	15.4	-	-	13.0	-	-	262
275	-	-	-	-	-	-	-	9.2	-	-	-	-	15.4	-	-	13.0	-	-	275
289	-	-	-	-	-	-	-	-	-	-	-	-	14.7	-	-	12.9	-	-	289
302	-	-	-	-	-	-	-	-	-	-	-	-	-	-	-	12.3	-	-	302
315	-	-	-	-	-	-	-	-	-	-	-	-	-	-	-	-	-	-	315

Remarks

* incl. 13.1 ft adapter

Counterweight	132,300 lb	176,400 lb	220,500 lb	264,600 lb	407,900 lb	352,800 lb	407,900 lb

Max. capacities with minimum counterweight

Further counterweight configurations on request

5

Lifting capacities luffing fly jib, main boom 83° to 65°

360° DIN/ISO

183.1 ft* Main boom

Radius ft	Fly jib 78.7 ft 83°	73°	65°	98.4 ft 83°	73°	65°	118.1 ft 83°	73°	65°	137.8 ft 83°	73°	65°	157.5 ft 83°	73°	65°	177.2 ft 83°	73°	65°	Radius ft
	1,000 lb																		
72	64.0	-	-	58.5	-	-	-	-	-	-	-	-	-	-	-	-	-	-	72
79	60.3	-	-	55.6	-	-	51.2	-	-	-	-	-	-	-	-	-	-	-	79
85	57.6	-	-	53.4	-	-	49.6	-	-	42.6	-	-	39.9	-	-	-	-	-	85
92	55.0	-	-	51.1	-	-	47.8	-	-	41.1	-	-	38.7	-	-	34.5	-	-	92
98	53.2	-	-	49.2	-	-	46.3	-	-	39.9	-	-	37.9	-	-	33.7	-	-	98
105	-	-	-	47.6	-	-	44.7	-	-	38.7	-	-	36.8	-	-	32.8	-	-	105
111	-	37.8	-	46.4	-	-	43.3	-	-	37.7	-	-	35.8	-	-	32.2	-	-	111
118	-	36.1	-	45.6	34.2	-	41.9	-	-	36.8	-	-	34.8	-	-	31.3	-	-	118
124	-	34.5	-	-	32.3	-	40.7	29.4	-	35.8	-	-	33.8	-	-	30.7	-	-	124
131	-	33.7	-	-	30.9	-	39.5	27.8	-	35.0	-	-	32.8	-	-	29.7	-	-	131
138	-	-	-	-	29.5	-	38.5	26.4	-	34.1	23.3	-	31.9	-	-	29.0	-	-	138
144	-	-	-	-	28.9	-	-	25.4	-	33.3	22.3	-	31.1	22.5	-	28.4	-	-	144
151	-	-	-	-	27.9	22.9	-	24.4	-	32.6	21.1	-	30.4	21.3	-	27.7	18.7	-	151
157	-	-	-	-	-	22.1	-	23.8	-	31.8	20.5	-	29.8	20.5	-	27.1	17.9	-	157
164	-	-	-	-	-	20.9	-	23.3	18.3	-	19.6	-	29.1	19.6	-	26.4	17.2	-	164
170	-	-	-	-	-	20.5	-	23.1	17.6	-	19.2	-	28.7	18.8	-	26.0	16.3	-	170
177	-	-	-	-	-	-	-	-	16.7	-	18.7	13.4	-	18.0	-	25.5	15.6	-	177
184	-	-	-	-	-	-	-	-	16.2	-	18.2	12.9	-	17.6	-	25.1	15.1	-	184
190	-	-	-	-	-	-	-	-	15.8	-	18.0	12.5	-	17.2	13.0	24.7	14.7	-	190
197	-	-	-	-	-	-	-	-	-	-	-	12.3	-	16.9	12.3	-	14.3	11.0	197
210	-	-	-	-	-	-	-	-	-	-	-	11.6	-	-	11.4	-	13.6	9.4	210
223	-	-	-	-	-	-	-	-	-	-	-	-	-	-	10.5	-	13.2	7.9	223
236	-	-	-	-	-	-	-	-	-	-	-	-	-	-	-	-	-	7.2	236
249	-	-	-	-	-	-	-	-	-	-	-	-	-	-	-	-	-	6.8	249
262	-	-	-	-	-	-	-	-	-	-	-	-	-	-	-	-	-	-	262

ft	196.9 ft			216.5 ft			236.2 ft			255.9 ft			275.6 ft			295.3 ft			ft
	1,000 lb																		
98	29.1	-	-	-	-	-	-	-	-	-	-	-	-	-	-	-	-	-	98
105	28.4	-	-	23.3	-	-	-	-	-	-	-	-	-	-	-	-	-	-	105
111	27.8	-	-	22.9	-	-	18.5	-	-	-	-	-	-	-	-	-	-	-	111
118	27.3	-	-	22.4	-	-	18.0	-	-	14.3	-	-	-	-	-	-	-	-	118
124	26.7	-	-	22.0	-	-	17.6	-	-	14.1	-	-	10.8	-	-	6.8	-	-	124
131	26.0	-	-	21.4	-	-	17.2	-	-	13.8	-	-	10.5	-	-	6.8	-	-	131
138	25.5	-	-	20.9	-	-	16.9	-	-	13.6	-	-	10.5	-	-	6.8	-	-	138
144	25.1	-	-	20.5	-	-	16.5	-	-	13.4	-	-	10.3	-	-	6.6	-	-	144
151	24.4	-	-	20.2	-	-	16.3	-	-	13.2	-	-	10.1	-	-	6.6	-	-	151
157	24.0	-	-	19.8	-	-	15.9	-	-	12.8	-	-	10.1	-	-	6.6	-	-	157
164	23.5	17.2	-	19.4	-	-	15.6	-	-	12.5	-	-	9.9	-	-	6.6	-	-	164
170	23.1	16.3	-	19.0	13.5	-	15.4	-	-	12.3	-	-	9.7	-	-	6.6	-	-	170
177	22.7	15.4	-	18.7	12.5	-	15.0	-	-	12.1	-	-	9.7	-	-	6.3	-	-	177
184	22.2	14.5	-	18.2	11.8	-	14.7	6.3	-	11.9	-	-	9.4	-	-	6.3	-	-	184
190	22.0	13.9	-	18.0	11.2	-	14.5	6.3	-	11.9	-	-	9.4	-	-	6.3	-	-	190
197	21.5	13.2	-	17.6	10.5	-	14.3	6.1	-	11.6	-	-	9.2	-	-	6.3	-	-	197
210	20.9	12.3	8.1	17.1	9.4	-	13.8	5.9	-	11.2	-	-	9.0	-	-	6.3	-	-	210
223	-	11.6	7.5	16.9	8.6	-	13.6	5.7	-	11.0	-	-	8.8	-	-	6.1	-	-	223
236	-	11.2	6.8	-	8.1	-	13.2	5.2	-	10.8	-	-	8.8	-	-	6.1	-	-	236
249	-	-	6.1	-	7.7	-	13.0	5.0	-	10.5	-	-	8.6	-	-	6.1	-	-	249
262	-	-	5.5	-	7.5	-	-	4.8	-	10.3	-	-	8.3	-	-	5.9	-	-	262
275	-	-	-	-	-	-	-	4.6	-	-	-	-	8.3	-	-	5.9	-	-	275
289	-	-	-	-	-	-	-	-	-	-	-	-	8.1	-	-	5.7	-	-	289
302	-	-	-	-	-	-	-	-	-	-	-	-	-	-	-	5.7	-	-	302
315	-	-	-	-	-	-	-	-	-	-	-	-	-	-	-	-	-	-	315

Remarks

* incl. 13.1 ft adapter

Counterweight	132,300 lb	176,400 lb	220,500 lb	264,600 lb	308,700 lb	352,800 lb	407,900 lb

Max. capacities with minimum counterweight

Further counterweight configurations on request

Working ranges luffing fly jib with SL, main boom 83° to 65°

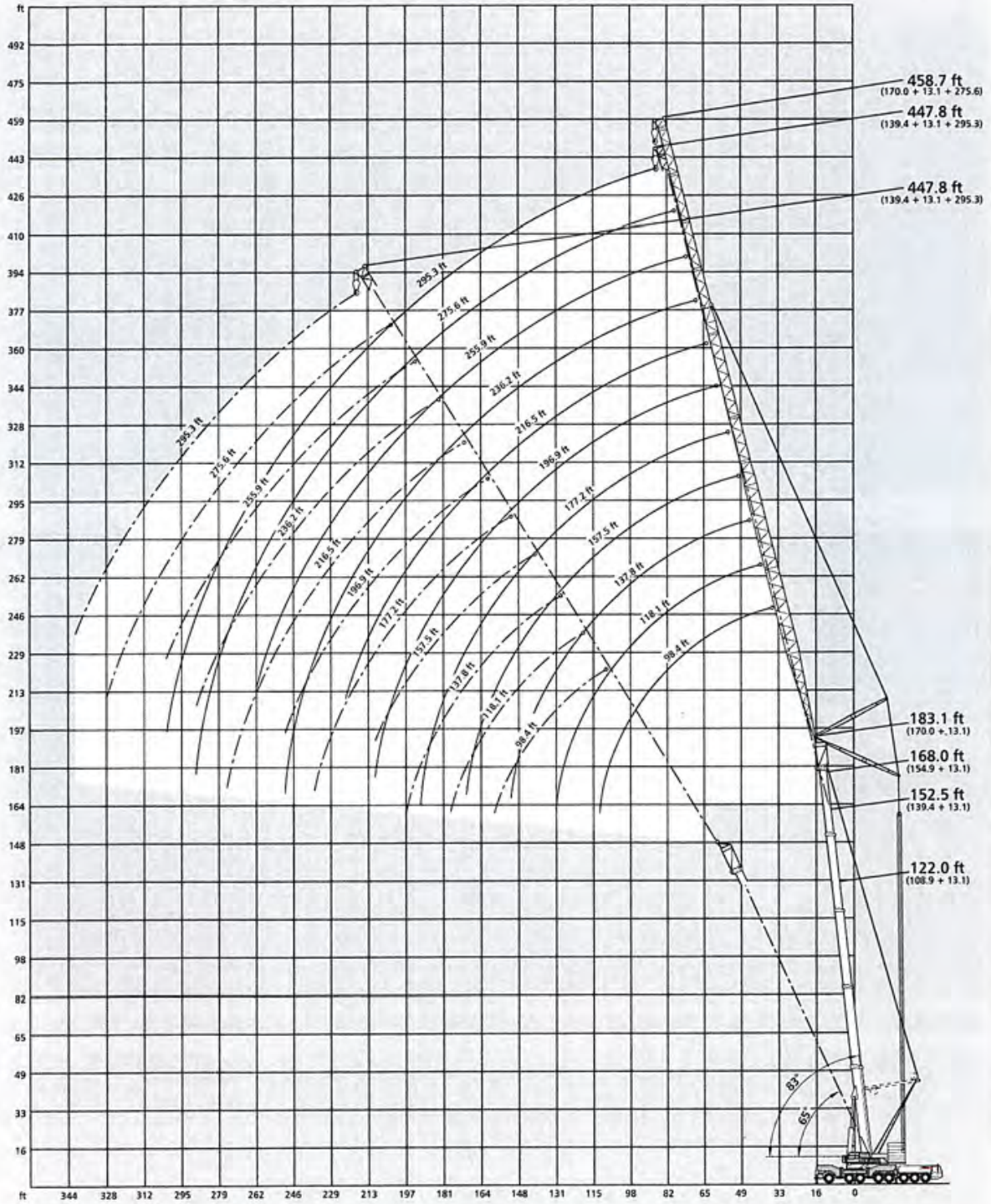

Lifting capacities luffing fly jib with SSL 0°, main boom 83° to 65°

360° DIN/ISO

122.0 ft* Main boom

Radius ft	98.4 ft 83°	98.4 ft 73°	98.4 ft 65°	118.1 ft 83°	118.1 ft 73°	118.1 ft 65°	Fly jib 137.8 ft 83°	Fly jib 137.8 ft 73°	Fly jib 137.8 ft 65°	157.5 ft 83°	157.5 ft 73°	157.5 ft 65°	177.2 ft 83°	177.2 ft 73°	177.2 ft 65°	Radius ft
							1,000 lb									
52	144.4	-	-	-	-	-	-	-	-	-	-	-	-	-	-	52
59	144.4	-	-	119.0	-	-	-	-	-	-	-	-	-	-	-	59
65	144.4	-	-	119.0	-	-	99.2	-	-	80.4	-	-	-	-	-	65
72	137.9	-	-	119.0	-	-	99.2	-	-	80.4	-	-	68.3	-	-	72
79	132.0	-	-	117.7	-	-	99.1	-	-	80.4	-	-	68.3	-	-	79
85	125.9	-	-	113.7	-	-	98.1	-	-	80.4	-	-	68.3	-	-	85
92	116.6	108.9	-	110.1	-	-	96.9	-	-	80.4	-	-	68.3	-	-	92
98	108.6	100.8	-	107.2	98.5	-	95.9	-	-	80.4	-	-	68.3	-	-	98
105	99.1	92.5	-	100.3	91.4	-	93.6	-	-	80.4	-	-	68.3	-	-	105
111	91.1	87.5	-	94.2	85.4	-	92.7	85.2	-	80.4	-	-	68.3	-	-	111
118	-	81.6	73.9	86.1	79.4	-	88.2	78.3	-	80.4	78.3	-	68.3	-	-	118
124	-	76.6	69.9	-	74.4	-	83.2	74.3	-	80.4	74.3	-	68.3	68.4	-	124
131	-	71.8	65.4	-	69.6	63.2	77.3	69.6	-	77.2	69.6	-	68.3	67.2	-	131
138	-	-	61.4	-	65.8	59.2	71.4	65.5	58.7	73.7	65.1	-	68.2	63.3	-	138
144	-	-	58.3	-	62.5	56.1	66.3	62.1	55.7	69.6	61.9	-	66.2	60.1	-	144
151	-	-	-	-	59.0	52.8	60.5	58.6	52.4	65.6	58.3	51.9	64.9	56.6	-	151
157	-	-	-	-	-	50.4	-	55.7	49.8	61.8	55.5	49.5	61.9	53.8	-	157
164	-	-	-	-	-	47.6	-	52.9	47.1	57.5	52.4	46.7	58.6	50.7	44.7	164
170	-	-	-	-	-	-	-	50.7	44.9	-	50.0	44.5	56.0	48.5	42.7	170
177	-	-	-	-	-	-	-	-	42.8	-	47.6	42.1	53.2	45.9	40.4	177
184	-	-	-	-	-	-	-	-	40.7	-	45.3	40.0	49.6	43.5	38.2	184
190	-	-	-	-	-	-	-	-	-	-	-	38.4	-	41.7	36.4	190
197	-	-	-	-	-	-	-	-	-	-	-	36.5	-	39.6	34.7	197
210	-	-	-	-	-	-	-	-	-	-	-	-	-	-	31.7	210
223	-	-	-	-	-	-	-	-	-	-	-	-	-	-	29.1	223

ft	196.9 ft			216.5 ft			236.2 ft			255.9 ft			275.6 ft			295.3 ft			ft
									1,000 lb										
79	59.5	-	-	-	-	-	-	-	-	-	-	-	-	-	-	-	-	-	79
85	59.5	-	-	47.6	-	-	-	-	-	-	-	-	-	-	-	-	-	-	85
92	59.5	-	-	47.6	-	-	40.7	-	-	-	-	-	-	-	-	-	-	-	92
98	59.5	-	-	47.6	-	-	40.7	-	-	35.2	-	-	-	-	-	-	-	-	98
105	59.5	-	-	47.6	-	-	40.7	-	-	35.2	-	-	28.6	-	-	23.5	-	-	105
111	59.5	-	-	47.6	-	-	40.7	-	-	35.2	-	-	28.6	-	-	23.5	-	-	111
118	59.5	-	-	47.6	-	-	40.7	-	-	35.2	-	-	28.6	-	-	23.5	-	-	118
124	59.5	-	-	47.6	-	-	40.7	-	-	35.2	-	-	28.6	-	-	23.5	-	-	124
131	59.5	59.5	-	47.6	-	-	40.7	-	-	35.2	-	-	28.6	-	-	23.5	-	-	131
138	59.4	59.5	-	47.6	-	-	40.7	-	-	35.2	-	-	28.6	-	-	23.5	-	-	138
144	59.5	59.1	-	47.6	47.6	-	40.7	-	-	35.2	-	-	28.6	-	-	23.5	-	-	144
151	59.4	55.7	-	47.6	47.6	-	40.7	40.7	-	35.2	-	-	28.6	-	-	23.5	-	-	151
157	58.9	52.9	-	47.6	47.6	-	40.7	40.7	-	35.2	-	-	28.6	-	-	23.5	-	-	157
164	57.9	50.0	-	47.6	47.6	-	40.7	40.7	-	35.2	35.2	-	28.6	-	-	23.5	-	-	164
170	55.3	47.6	-	47.6	45.8	-	40.7	40.7	-	35.2	35.2	-	28.6	28.6	-	23.5	-	-	170
177	52.5	45.0	39.5	47.6	43.2	-	40.7	40.7	-	35.2	35.2	-	28.6	28.6	-	23.5	21.1	-	177
184	49.9	42.6	37.4	47.5	40.9	35.4	40.5	38.9	-	35.2	35.2	-	28.6	28.6	-	23.5	20.9	-	184
190	47.7	40.8	35.7	45.9	39.1	33.8	40.3	37.1	-	35.2	35.2	-	28.6	28.6	-	23.5	20.7	-	190
197	45.5	38.9	33.9	43.8	37.0	31.9	40.1	35.0	29.9	35.0	34.7	-	28.6	28.6	-	23.5	20.4	-	197
210	-	35.4	30.8	39.8	33.7	28.8	38.1	31.7	26.8	34.8	31.3	26.4	28.4	28.6	-	23.5	19.8	-	210
223	-	32.6	28.0	34.4	30.6	26.0	34.8	28.6	24.0	34.3	28.4	23.6	27.5	28.0	23.3	23.3	19.4	-	223
236	-	-	25.8	-	28.0	23.8	31.8	26.0	21.8	31.5	25.8	21.4	26.6	25.3	20.9	22.7	18.9	19.4	236
249	-	-	-	-	-	21.6	-	23.8	19.6	28.9	23.4	19.2	25.6	22.9	18.7	22.0	18.7	17.8	249
262	-	-	-	-	-	19.9	-	21.8	17.7	22.7	21.2	17.2	24.7	21.0	16.8	21.1	18.5	15.9	262
275	-	-	-	-	-	-	-	-	16.1	-	19.4	15.5	22.5	19.0	15.2	20.5	18.0	14.1	275
289	-	-	-	-	-	-	-	-	-	-	-	13.8	-	17.1	13.6	19.7	16.2	12.5	289
302	-	-	-	-	-	-	-	-	-	-	-	-	-	-	12.1	-	14.7	11.2	302
315	-	-	-	-	-	-	-	-	-	-	-	-	-	-	11.0	-	13.4	9.9	315
328	-	-	-	-	-	-	-	-	-	-	-	-	-	-	-	-	-	8.8	328

Remarks

* incl. 13.1 ft adapter

Counterweight 264,600 lb 308,700 lb 352,800 lb 407,900 lb

Max. capacities with minimum counterweight Further counterweight configurations on request

360° DIN/ISO

152.5 ft* Main boom

Radius ft	98.4 ft 83°	98.4 ft 73°	98.4 ft 65°	118.1 ft 83°	118.1 ft 73°	118.1 ft 65°	Fly jib 137.8 ft 83°	Fly jib 137.8 ft 73°	Fly jib 137.8 ft 65°	157.5 ft 83°	157.5 ft 73°	157.5 ft 65°	177.2 ft 83°	177.2 ft 73°	177.2 ft 65°	Radius ft
							1,000 lb									
59	95.9	-	-	-	-	-	-	-	-	-	-	-	-	-	-	59
65	95.0	-	-	79.3	-	-	67.4	-	-	-	-	-	-	-	-	65
72	94.7	-	-	78.2	-	-	66.1	-	-	58.4	-	-	-	-	-	72
79	94.7	-	-	77.1	-	-	66.1	-	-	58.4	-	-	50.9	-	-	79
85	94.7	-	-	77.1	-	-	66.1	-	-	58.4	-	-	50.9	-	-	85
92	94.7	-	-	77.1	-	-	66.1	-	-	58.4	-	-	50.9	-	-	92
98	90.6	96.3	-	77.1	-	-	66.1	-	-	58.4	-	-	50.9	-	-	98
105	84.8	89.2	-	74.9	-	-	66.1	-	-	58.4	-	-	50.9	-	-	105
111	79.8	83.2	-	73.8	77.3	-	66.1	-	-	58.4	-	-	50.9	-	-	111
118	-	77.2	-	69.5	73.9	-	64.8	66.1	-	58.4	-	-	50.9	-	-	118
124	-	73.2	-	66.2	70.8	-	63.8	66.1	-	58.4	58.6	-	50.9	-	-	124
131	-	68.5	60.9	62.0	66.2	-	60.9	65.5	-	57.5	58.4	-	50.9	-	-	131
138	-	64.9	57.2	-	62.9	-	58.1	62.5	-	56.5	58.4	-	50.8	50.9	-	138
144	-	-	54.4	-	59.7	52.1	55.4	59.2	-	54.5	58.4	-	50.3	50.9	-	144
151	-	-	51.1	-	56.1	49.1	52.6	55.7	-	52.4	55.5	-	49.5	50.9	-	151
157	-	-	48.9	-	53.5	46.7	-	53.1	46.0	50.6	52.9	-	47.9	50.9	-	157
164	-	-	-	-	-	44.1	-	50.2	43.4	48.5	50.0	43.2	46.0	48.0	-	164
170	-	-	-	-	-	42.0	-	48.0	41.4	46.7	47.6	41.2	44.4	45.8	-	170
177	-	-	-	-	-	39.9	-	45.6	39.2	-	45.2	38.8	42.8	43.4	36.8	177
184	-	-	-	-	-	-	-	-	37.1	-	42.9	36.9	40.9	41.1	34.9	184
190	-	-	-	-	-	-	-	-	35.7	-	41.3	35.3	39.3	39.3	33.3	190
197	-	-	-	-	-	-	-	-	33.9	-	39.1	33.4	-	37.4	31.4	197
210	-	-	-	-	-	-	-	-	-	-	-	30.6	-	34.1	28.6	210
223	-	-	-	-	-	-	-	-	-	-	-	-	-	-	26.2	223
236	-	-	-	-	-	-	-	-	-	-	-	-	-	-	24.0	236

ft	196.9 ft			216.5 ft			236.2 ft			255.9 ft			275.6 ft			295.3 ft			ft
									1,000 lb										
85	44.9	-	-	-	-	-	-	-	-	-	-	-	-	-	-	-	-	-	85
92	44.5	-	-	34.8	-	-	-	-	-	-	-	-	-	-	-	-	-	-	92
98	43.9	-	-	34.8	-	-	27.5	-	-	23.5	-	-	-	-	-	-	-	-	98
105	43.4	-	-	34.8	-	-	27.5	-	-	23.5	-	-	18.7	-	-	-	-	-	105
111	43.0	-	-	34.8	-	-	27.5	-	-	23.5	-	-	18.7	-	-	14.7	-	-	111
118	42.9	-	-	34.8	-	-	27.5	-	-	23.5	-	-	18.7	-	-	14.7	-	-	118
124	42.7	-	-	34.8	-	-	27.5	-	-	23.5	-	-	18.7	-	-	14.7	-	-	124
131	42.7	-	-	34.8	-	-	27.5	-	-	23.5	-	-	18.7	-	-	14.7	-	-	131
138	42.7	-	-	34.8	-	-	27.5	-	-	23.5	-	-	18.7	-	-	14.7	-	-	138
144	42.7	43.8	-	34.8	-	-	27.5	-	-	23.5	-	-	18.7	-	-	14.7	-	-	144
151	42.7	43.8	-	34.8	-	-	27.5	-	-	23.5	-	-	18.7	-	-	14.7	-	-	151
157	42.3	43.8	-	34.8	34.8	-	27.5	-	-	23.5	-	-	18.7	-	-	14.7	-	-	157
164	42.1	43.8	-	34.8	34.8	-	27.5	27.5	-	23.5	-	-	18.7	-	-	14.7	-	-	164
170	41.1	43.8	-	34.6	34.8	-	27.5	27.5	-	23.5	23.7	-	18.7	-	-	14.7	-	-	170
177	40.1	42.5	-	34.3	34.8	-	27.5	27.5	-	23.5	23.5	-	18.7	-	-	14.7	-	-	177
184	39.2	40.2	-	33.6	34.7	-	27.5	27.5	-	23.5	23.5	-	18.7	18.7	-	14.7	-	-	184
190	38.4	38.6	32.4	32.8	34.8	-	27.3	27.5	-	23.5	23.5	-	18.7	18.7	-	14.7	13.6	-	190
197	37.2	36.5	30.6	32.1	34.5	-	27.0	27.5	-	23.5	23.5	-	18.7	18.7	-	14.7	13.4	-	197
210	35.4	33.2	27.7	30.8	31.5	25.7	26.6	27.3	23.8	23.3	23.5	-	18.7	18.7	-	14.7	13.0	-	210
223	-	30.6	25.1	29.5	28.6	23.1	26.0	26.6	21.1	22.9	23.5	20.7	18.7	18.7	-	14.7	12.5	-	223
236	-	28.0	22.9	-	26.0	20.9	25.5	24.0	18.9	22.7	23.1	18.5	18.7	18.7	16.5	14.7	12.1	-	236
249	-	-	20.9	-	23.8	19.0	24.9	21.8	17.0	22.2	21.4	16.5	18.7	18.7	16.1	14.7	11.6	9.9	249
262	-	-	-	-	-	17.2	-	19.9	15.2	22.0	19.4	14.8	18.7	18.5	14.3	14.7	11.4	9.9	262
275	-	-	-	-	-	15.7	-	18.1	13.7	-	17.7	13.0	18.7	17.2	12.6	14.7	11.2	9.9	275
289	-	-	-	-	-	-	-	-	12.1	-	16.0	11.6	17.3	15.6	11.2	14.7	10.7	9.8	289
302	-	-	-	-	-	-	-	-	-	-	-	10.3	-	14.0	9.9	14.7	10.5	8.8	302
315	-	-	-	-	-	-	-	-	-	-	-	-	-	-	8.8	-	10.3	7.7	315
328	-	-	-	-	-	-	-	-	-	-	-	-	-	-	7.7	-	10.1	6.6	328
341	-	-	-	-	-	-	-	-	-	-	-	-	-	-	-	-	-	5.7	341

Remarks

* incl. 13.1 ft adapter

Counterweight 264,600 lb 308,700 lb 352,800 lb 407,900 lb

Max. capacities with minimum counterweight Further counterweight configurations on request

5

Lifting capacities luffing fly jib with SSL 0°, main boom 83° to 65°

360° DIN/ISO

168.0 ft* Main boom

Radius ft	98.4 ft 83°	98.4 ft 73°	98.4 ft 65°	118.1 ft 83°	118.1 ft 73°	118.1 ft 65°	Fly jib 137.8 ft 83°	Fly jib 137.8 ft 73°	Fly jib 137.8 ft 65°	157.5 ft 83°	157.5 ft 73°	157.5 ft 65°	177.2 ft 83°	177.2 ft 73°	177.2 ft 65°	Radius ft
							1,000 lb									
59	70.5	-	-	-	-	-	-	-	-	-	-	-	-	-	-	59
65	68.5	-	-	58.1	-	-	-	-	-	-	-	-	-	-	-	65
72	66.1	-	-	56.4	-	-	47.6	-	-	-	-	-	-	-	-	72
79	66.1	-	-	54.6	-	-	46.2	-	-	44.9	-	-	40.5	-	-	79
85	66.1	-	-	54.0	-	-	45.0	-	-	43.9	-	-	39.7	-	-	85
92	66.1	-	-	54.0	-	-	44.0	-	-	42.9	-	-	38.5	-	-	92
98	65.5	-	-	54.0	-	-	44.0	-	-	41.9	-	-	37.7	-	-	98
105	64.3	70.5	-	53.7	-	-	44.0	-	-	41.4	-	-	37.0	-	-	105
111	63.3	68.5	-	53.3	-	-	44.0	-	-	41.0	-	-	36.4	-	-	111
118	62.1	66.1	-	52.4	56.8	-	43.8	-	-	40.7	-	-	36.3	-	-	118
124	-	64.1	-	51.6	56.4	-	43.8	46.2	-	40.3	-	-	36.3	-	-	124
131	-	61.1	-	50.5	56.0	-	43.2	46.2	-	39.9	39.6	-	36.3	-	-	131
138	-	58.3	55.4	49.5	55.4	-	42.7	46.2	-	39.4	39.6	-	36.3	-	-	138
144	-	55.9	52.4	-	53.0	-	42.1	46.2	-	39.0	39.6	-	36.1	35.2	-	144
151	-	-	49.3	-	50.2	47.3	41.6	46.2	-	38.5	39.6	-	36.1	35.2	-	151
157	-	-	47.1	-	47.8	44.9	41.0	44.4	-	38.1	39.6	-	35.5	35.2	-	157
164	-	-	44.5	-	44.9	42.3	-	42.3	41.9	37.9	39.6	-	34.8	35.2	-	164
170	-	-	-	-	-	40.3	-	40.5	39.8	37.5	38.6	-	34.4	35.2	-	170
177	-	-	-	-	-	38.1	-	38.6	37.7	-	37.7	37.3	33.7	35.2	-	177
184	-	-	-	-	-	36.3	-	36.5	35.6	-	36.5	35.4	33.0	34.3	33.4	184
190	-	-	-	-	-	-	-	-	34.2	-	35.5	33.8	32.4	33.5	31.8	190
197	-	-	-	-	-	-	-	-	32.5	-	34.5	32.1	-	32.6	30.1	197
210	-	-	-	-	-	-	-	-	-	-	-	29.3	-	30.6	27.3	210
223	-	-	-	-	-	-	-	-	-	-	-	26.6	-	28.8	24.7	223
236	-	-	-	-	-	-	-	-	-	-	-	-	-	-	22.7	236

ft	196.9 ft			216.5 ft			236.2 ft			255.9 ft			275.6 ft			295.3 ft			ft
									1,000 lb										
85	34.6	-	-	-	-	-	-	-	-	-	-	-	-	-	-	-	-	-	85
92	33.9	-	-	26.8	-	-	-	-	-	-	-	-	-	-	-	-	-	-	92
98	33.1	-	-	26.4	-	-	21.1	-	-	-	-	-	-	-	-	-	-	-	98
105	32.1	-	-	26.0	-	-	20.7	-	-	15.8	-	-	-	-	-	-	-	-	105
111	31.3	-	-	25.4	-	-	20.5	-	-	15.8	-	-	12.3	-	-	-	-	-	111
118	31.0	-	-	24.9	-	-	20.2	-	-	15.8	-	-	12.3	-	-	-	-	-	118
124	30.6	-	-	24.5	-	-	20.0	-	-	15.8	-	-	12.3	-	-	-	-	-	124
131	30.6	-	-	24.2	-	-	19.8	-	-	15.8	-	-	12.3	-	-	-	-	-	131
138	30.6	-	-	24.2	-	-	19.6	-	-	15.8	-	-	12.3	-	-	-	-	-	138
144	30.6	-	-	24.2	-	-	19.6	-	-	15.8	-	-	12.3	-	-	-	-	-	144
151	30.6	30.2	-	24.2	-	-	19.6	-	-	15.8	-	-	12.3	-	-	-	-	-	151
157	30.6	30.2	-	24.2	24.6	-	19.6	-	-	15.8	-	-	12.3	-	-	-	-	-	157
164	30.4	30.2	-	24.2	24.6	-	19.6	-	-	15.8	-	-	12.3	-	-	-	-	-	164
170	30.2	30.2	-	24.2	24.6	-	19.6	19.8	-	15.8	-	-	12.3	-	-	-	-	-	170
177	29.9	30.2	-	24.2	24.6	-	16.6	19.8	-	15.8	15.2	-	12.3	-	-	-	-	-	177
184	29.7	30.1	-	24.2	24.6	-	16.6	19.8	-	15.8	15.2	-	12.3	11.9	-	-	-	-	184
190	29.5	30.2	-	24.2	24.6	-	16.6	19.8	-	15.8	15.2	-	12.3	11.9	-	-	-	-	190
197	29.0	29.5	29.0	24.0	24.6	-	16.6	19.8	-	15.8	15.1	-	12.3	11.9	-	-	-	-	197
210	28.6	28.2	26.4	24.0	24.2	24.4	19.6	19.8	-	15.8	15.2	-	12.3	11.9	-	-	-	-	210
223	-	26.9	23.8	23.8	23.3	21.8	19.6	19.6	19.8	15.8	15.2	-	12.3	11.9	-	-	-	-	223
236	-	24.8	21.6	-	22.9	19.6	18.5	19.1	17.6	15.8	15.2	14.9	12.3	11.9	-	-	-	-	236
249	-	-	19.8	-	21.6	17.9	16.5	18.5	15.7	15.8	14.9	14.7	12.3	11.9	10.5	-	-	-	249
262	-	-	18.1	-	20.5	16.1	19.6	18.0	13.9	15.8	14.7	13.4	12.3	11.9	10.3	-	-	-	262
275	-	-	-	-	-	14.6	19.6	17.2	12.4	15.8	14.5	11.9	12.3	11.9	10.3	-	-	-	275
289	-	-	-	-	-	-	-	-	10.9	-	14.3	10.5	12.3	11.8	10.1	-	-	-	289
302	-	-	-	-	-	-	-	-	-	-	-	9.2	-	11.9	8.8	-	-	-	302
315	-	-	-	-	-	-	-	-	-	-	-	8.1	-	11.9	7.7	-	-	-	315
328	-	-	-	-	-	-	-	-	-	-	-	-	-	-	6.6	-	-	-	328
341	-	-	-	-	-	-	-	-	-	-	-	-	-	-	-	-	-	-	341

Remarks

* incl. 13.1 ft adapter

Counterweight 264,600 lb 308,700 lb 352,800 lb 407,900 lb

Max. capacities with minimum counterweight Further counterweight configurations on request

360° DIN/ISO

183.1 ft* Main boom

Radius ft	98.4 ft 83°	98.4 ft 73°	98.4 ft 65°	118.1 ft 83°	118.1 ft 73°	118.1 ft 65°	Fly jib 137.8 ft 83°	Fly jib 137.8 ft 73°	Fly jib 137.8 ft 65°	157.5 ft 83°	157.5 ft 73°	157.5 ft 65°	177.2 ft 83°	177.2 ft 73°	177.2 ft 65°	Radius ft
							1,000 lb									
59	56.4	-	-	-	-	-	-	-	-	-	-	-	-	-	-	59
65	54.6	-	-	46.0	-	-	-	-	-	-	-	-	-	-	-	65
72	52.7	-	-	44.1	-	-	37.9	-	-	-	-	-	-	-	-	72
79	51.5	-	-	42.4	-	-	36.5	-	-	34.1	-	-	-	-	-	79
85	51.3	-	-	41.2	-	-	35.5	-	-	33.7	-	-	30.0	-	-	85
92	51.1	-	-	40.9	-	-	34.1	-	-	33.2	-	-	29.5	-	-	92
98	50.9	-	-	40.7	-	-	33.7	-	-	32.8	-	-	29.1	-	-	98
105	50.4	-	-	40.5	-	-	33.5	-	-	32.4	-	-	28.6	-	-	105
111	50.2	48.3	-	40.3	-	-	33.5	-	-	32.2	-	-	28.2	-	-	111
118	49.8	47.6	-	39.9	40.1	-	33.2	-	-	31.7	-	-	27.7	-	-	118
124	-	46.8	-	39.7	40.1	-	33.0	-	-	31.5	-	-	27.5	-	-	124
131	-	45.6	-	39.2	40.1	-	32.8	32.6	-	31.1	-	-	27.1	-	-	131
138	-	44.4	-	39.0	40.0	-	32.8	32.6	-	30.8	30.8	-	26.6	-	-	138
144	-	43.0	43.0	-	39.0	-	32.6	32.6	-	30.6	30.8	-	26.4	24.9	-	144
151	-	41.6	41.6	-	37.9	-	32.6	32.6	-	30.4	30.8	-	26.2	24.9	-	151
157	-	-	39.8	-	36.4	33.8	32.4	32.0	-	30.2	30.8	-	26.0	24.9	-	157
164	-	-	37.7	-	34.6	32.6	-	31.3	-	29.9	30.8	-	25.7	24.9	-	164
170	-	-	35.2	-	33.0	31.6	-	30.2	32.0	29.5	30.2	-	25.5	24.9	-	170
177	-	-	-	-	-	30.4	-	29.1	30.6	-	29.7	-	25.3	24.9	-	177
184	-	-	-	-	-	29.5	-	27.9	29.2	-	28.6	27.5	25.1	24.4	-	184
190	-	-	-	-	-	28.6	-	26.9	28.0	-	27.8	26.5	25.1	24.2	24.2	190
197	-	-	-	-	-	-	-	-	26.6	-	26.8	25.3	-	23.5	23.5	197
210	-	-	-	-	-	-	-	-	24.0	-	-	23.5	-	22.4	22.7	210
223	-	-	-	-	-	-	-	-	-	-	-	22.2	-	21.1	20.9	223
236	-	-	-	-	-	-	-	-	-	-	-	-	-	-	18.3	236
249	-	-	-	-	-	-	-	-	-	-	-	-	-	-	15.7	249
262	-	-	-	-	-	-	-	-	-	-	-	-	-	-	-	262

ft	196.9 ft			216.5 ft			236.2 ft			255.9 ft			275.6 ft			295.3 ft			ft
									1,000 lb										
92	24.6	-	-	-	-	-	-	-	-	-	-	-	-	-	-	-	-	-	92
98	24.6	-	-	19.4	-	-	14.5	-	-	-	-	-	-	-	-	-	-	-	98
105	24.4	-	-	19.1	-	-	14.5	-	-	9.9	-	-	-	-	-	-	-	-	105
111	24.2	-	-	19.1	-	-	14.5	-	-	9.9	-	-	5.9	-	-	-	-	-	111
118	24.0	-	-	18.9	-	-	14.5	-	-	9.9	-	-	5.9	-	-	-	-	-	118
124	23.8	-	-	18.7	-	-	14.5	-	-	9.9	-	-	5.9	-	-	-	-	-	124
131	23.5	-	-	18.7	-	-	14.5	-	-	9.9	-	-	5.9	-	-	-	-	-	131
138	23.3	-	-	18.5	-	-	14.5	-	-	9.9	-	-	5.9	-	-	-	-	-	138
144	23.1	-	-	18.3	-	-	14.5	-	-	9.9	-	-	5.9	-	-	-	-	-	144
151	22.9	-	-	18.2	-	-	14.3	-	-	9.9	-	-	5.9	-	-	-	-	-	151
157	22.7	20.0	-	18.0	-	-	14.3	-	-	9.9	-	-	5.9	-	-	-	-	-	157
164	22.4	20.0	-	17.8	16.3	-	14.3	-	-	9.9	-	-	5.9	-	-	-	-	-	164
170	22.2	20.0	-	17.8	16.3	-	14.1	-	-	9.9	-	-	5.9	-	-	-	-	-	170
177	22.2	20.0	-	17.6	16.3	-	14.1	-	-	9.9	-	-	5.9	-	-	-	-	-	177
184	22.2	20.0	-	17.6	16.3	-	13.8	11.9	-	9.9	8.8	-	5.9	-	-	-	-	-	184
190	22.0	20.0	-	17.6	16.3	-	13.8	11.9	-	9.9	8.8	-	5.9	5.2	-	-	-	-	190
197	22.0	19.8	-	17.6	16.3	-	13.8	11.9	-	9.9	8.8	-	5.9	5.2	-	-	-	-	197
210	21.8	19.6	20.0	17.4	16.0	-	13.6	11.9	-	9.9	8.8	-	5.9	5.2	-	-	-	-	210
223	-	19.1	19.8	17.4	15.8	16.0	13.6	11.9	-	9.9	8.8	-	5.9	5.2	-	-	-	-	223
236	-	18.7	19.1	-	15.2	15.6	13.4	11.4	11.6	9.9	8.8	-	5.9	5.2	-	-	-	-	236
249	-	-	18.1	-	14.7	15.2	13.2	11.0	11.2	9.9	8.6	8.8	5.9	5.2	4.8	-	-	-	249
262	-	-	16.5	-	14.1	14.1	-	10.8	11.0	9.9	8.5	8.6	5.9	5.2	4.8	-	-	-	262
275	-	-	-	-	-	12.8	-	10.3	10.3	-	8.3	8.5	5.9	5.2	4.8	-	-	-	275
289	-	-	-	-	-	11.4	-	-	9.6	-	8.3	8.1	5.9	5.2	4.8	-	-	-	289
302	-	-	-	-	-	-	-	-	8.8	-	-	7.4	-	5.2	4.8	-	-	-	302
315	-	-	-	-	-	-	-	-	-	-	-	6.8	-	5.2	4.6	-	-	-	315
328	-	-	-	-	-	-	-	-	-	-	-	-	-	-	4.6	-	-	-	328
341	-	-	-	-	-	-	-	-	-	-	-	-	-	-	4.4	-	-	-	341
354	-	-	-	-	-	-	-	-	-	-	-	-	-	-	-	-	-	-	354

Remarks

* incl. 13.1 ft adapter

Counterweight	264,600 lb	308,700 lb	352,800 lb	407,900 lb

See page 34

(909) 222-0202 www.reliablecraneservice.com 260 North Smith Ave. Corona, CA 92880

Lifting capacities luffing fly jib with SSL 60°, main boom 83°

360° DIN/ISO

122.0 ft* Main boom

Radius ft	98.4 ft 83°	118.1 ft 83°	137.8 ft 83°	157.5 ft 83°	177.2 ft 83°	Fly jib 196.9 ft 83° 1,000 lb	216.5 ft 83°	236.2 ft 83°	255.9 ft 83°	275.6 ft 83°	295.3 ft 83°	Radius ft
59	165.3	141.2	-	-	-	-	-	-	-	-	-	59
65	149.1	137.3	125.6	-	-	-	-	-	-	-	-	65
72	136.7	127.2	122.3	105.9	-	-	-	-	-	-	-	72
79	127.2	118.3	114.7	103.6	92.4	-	-	-	-	-	-	79
85	119.4	112.5	108.1	99.8	89.6	77.1	-	-	-	-	-	85
92	110.9	105.9	102.8	95.3	86.5	75.1	66.1	54.0	-	-	-	92
98	104.2	100.0	98.4	91.9	83.7	73.3	64.7	53.6	45.2	-	-	98
105	96.3	93.4	93.2	88.1	80.6	71.4	63.0	52.4	44.7	37.0	-	105
111	89.6	88.2	88.8	84.9	78.4	69.6	61.6	51.4	44.1	36.8	29.1	111
118	-	82.1	83.6	81.1	75.8	67.9	59.9	50.2	43.4	36.3	28.8	118
124	-	76.8	79.6	77.9	73.6	66.5	58.9	49.2	42.8	35.7	28.6	124
131	-	70.5	74.6	73.9	71.0	64.8	57.8	48.3	41.9	35.2	28.2	131
138	-	-	69.7	69.7	68.4	63.2	56.6	47.8	41.2	34.5	27.9	138
144	-	-	65.5	66.1	65.8	62.0	55.6	47.2	40.8	34.1	27.5	144
151	-	-	60.7	61.9	62.7	60.3	54.6	46.7	40.3	33.7	27.1	151
157	-	-	-	58.4	59.9	58.5	53.6	46.1	39.7	33.1	26.9	157
164	-	-	-	54.2	56.6	55.7	52.4	45.6	39.2	32.4	26.4	164
170	-	-	-	-	54.0	53.5	50.6	45.0	38.8	32.0	26.2	170
177	-	-	-	-	50.7	50.7	48.7	44.5	38.3	31.3	25.8	177
184	-	-	-	-	47.4	48.1	46.4	43.3	37.8	30.8	25.3	184
190	-	-	-	-	-	45.9	44.4	42.3	37.2	30.2	25.1	190
197	-	-	-	-	-	43.1	42.0	40.9	36.3	29.5	24.6	197
210	-	-	-	-	-	-	38.1	38.1	33.7	28.4	24.0	210
223	-	-	-	-	-	-	34.2	34.8	31.1	27.1	23.3	223
236	-	-	-	-	-	-	-	-	28.7	26.0	22.5	236
249	-	-		-	-	-	-	-	26.7	24.7	21.8	249
262	-	-		-	-	-	-	-	22.6	23.4	21.1	262
275	-	-		-	-	-	-	-	-	22.1	20.5	275
289	-	-		-	-	-	-	-		-	19.5	289

137.4 ft* Main boom

Radius ft	98.4 ft 83°	118.1 ft 83°	137.8 ft 83°	157.5 ft 83°	177.2 ft 83°	Fly jib 196.9 ft 83° 1,000 lb	216.5 ft 83°	236.2 ft 83°	255.9 ft 83°	275.6 ft 83°	295.3 ft 83°	Radius ft
59	147.7	-	-	-	-	-	-	-	-	-	-	59
65	135.1	124.3	-	-	-	-	-	-	-	-	-	65
72	122.3	115.9	110.2	97.0	-	-	-	-	-	-	-	72
79	114.1	106.6	103.3	94.7	86.8	-	-	-	-	-	-	79
85	107.2	101.4	97.3	91.4	85.2	71.6	-	-	-	-	-	85
92	99.5	95.3	91.3	87.4	81.4	70.2	59.4	-	-	-	-	92
98	93.6	90.3	86.9	84.0	78.2	68.0	58.4	50.7	-	-	-	98
105	86.8	84.2	81.7	80.0	74.5	65.2	57.0	49.6	-	33.7	-	105
111	81.0	79.3	77.3	76.7	72.0	62.8	56.0	48.3	41.0	33.7	24.2	111
118	-	73.7	72.1	72.8	69.0	60.8	54.6	47.1	40.3	33.0	24.0	118
124	-	68.8	68.5	69.5	66.6	59.4	53.6	46.1	39.5	32.4	23.8	124
131	-	63.2	64.0	65.8	63.8	57.8	52.2	45.0	38.6	31.7	23.3	131
138	-	-	59.8	62.2	60.7	56.1	50.8	44.0	37.8	31.0	23.1	138
144	-	-	56.0	59.0	58.3	54.7	49.8	43.4	37.2	30.4	22.7	144
151	-	-	51.7	55.5	55.5	53.3	48.4	42.7	36.5	29.9	22.4	151
157	-	-	-	52.4	53.1	51.9	47.2	42.1	36.1	29.5	22.0	157
164	-	-	-	48.7	50.0	49.6	46.0	41.4	35.7	29.3	22.0	164
170	-	-	-	45.7	47.6	47.6	44.6	40.6	35.3	29.1	21.8	170
177	-	-	-	-	44.8	45.2	43.0	39.9	34.6	28.6	21.8	177
184	-	-	-	-	42.0	42.9	41.1	38.7	34.1	28.4	21.6	184
190	-	-	-	-	39.5	40.8	39.3	37.7	33.7	28.0	21.6	190
197	-	-	-	-	-	38.5	37.4	36.1	32.8	27.7	21.3	197
210	-	-	-	-	-	34.1	33.9	32.8	30.8	26.8	21.3	210
223	-	-	-	-	-	-	30.2	29.5	28.4	25.5	20.9	223
236	-	-	-	-	-	-	-	26.5	26.2	24.0	20.0	236
249	-	-	-	-	-	-	-	-	23.8	22.5	19.4	249
262	-	-	-	-	-	-	-	-	21.4	21.0	18.5	262
275	-	-	-	-	-	-	-	-	-	19.4	17.6	275
289	-	-	-	-	-	-	-	-	-	-	16.7	289
302	-	-	-	-	-	-	-	-	-	-	15.8	302
315	-	-	-	-	-	-	-	-	-	-	-	315

360° DIN/ISO

152.5 ft* Main boom

Radius ft	98.4 ft 83°	118.1 ft 83°	137.8 ft 83°	157.5 ft 83°	177.2 ft 83°	Fly jib 196.9 ft 83° 1,000 lb	216.5 ft 83°	236.2 ft 83°	255.9 ft 83°	275.6 ft 83°	295.3 ft 83°	Radius ft
59	-	-	-	-	-	-	-	-	-	-	-	59
65	127.8	108.0	-	-	-	-	-	-	-	-	-	65
72	112.6	104.4	95.9	-	-	-	-	-	-	-	-	72
79	106.0	96.4	92.5	85.9	-	-	-	-	-	-	-	79
85	102.0	91.6	86.9	83.7	76.0	-	-	-	-	-	-	85
92	97.3	87.8	80.8	78.8	72.9	66.0	-	-	-	-	-	92
98	92.1	84.6	78.0	74.3	70.0	64.0	55.1	44.1	-	-	-	98
105	85.7	80.9	74.5	71.4	67.0	61.7	53.5	43.6	37.4	-	-	105
111	80.1	76.8	71.6	69.0	64.5	59.5	52.1	42.8	37.0	30.8	-	111
118	-	71.7	68.1	66.4	62.6	57.1	50.5	41.9	36.3	30.6	22.0	118
124	-	67.3	65.1	64.1	61.0	55.9	49.1	41.0	35.5	30.0	21.8	124
131	-	61.9	61.4	61.5	59.1	54.5	47.6	40.1	34.6	29.5	21.4	131
138	-	-	57.6	58.7	57.2	53.0	46.2	39.4	33.7	28.8	20.9	138
144	-	-	54.4	55.9	55.6	51.8	45.0	39.0	33.1	28.2	20.7	144
151	-	-	50.6	52.8	53.3	50.4	43.8	38.5	32.6	27.7	20.2	151
157	-	-	-	50.2	51.1	49.2	42.6	38.3	32.4	27.3	20.0	157
164	-	-	-	47.2	48.3	47.4	41.2	37.9	31.9	26.8	19.8	164
170	-	-	-	44.5	46.0	45.5	40.0	37.5	31.7	26.6	19.6	170
177	-	-	-	-	43.4	43.2	38.6	37.0	31.3	26.2	19.4	177
184	-	-	-	-	40.8	41.1	36.9	36.3	31.0	25.7	19.1	184
190	-	-	-	-	38.4	39.1	35.5	35.7	30.6	25.5	18.9	190
197	-	-	-	-	-	36.9	33.6	34.1	30.1	25.1	18.7	197
210	-	-	-	-	-	32.8	30.6	31.3	28.6	24.4	18.2	210
223	-	-	-	-	-	-	27.3	28.2	26.6	23.3	17.8	223
236	-	-	-	-	-	-	-	25.4	24.5	22.0	17.2	236
249	-	-	-	-	-	-	-	22.3	22.5	20.5	16.5	249
262	-	-	-	-	-	-	-	-	20.3	19.2	16.1	262
275	-	-	-	-	-	-	-	-	-	17.9	15.4	275
289	-	-	-	-	-	-	-	-	-	-	14.7	289
302	-	-	-	-	-	-	-	-	-	-	14.1	302

168.0 ft* Main boom

Radius ft	98.4 ft 83°	118.1 ft 83°	137.8 ft 83°	157.5 ft 83°	177.2 ft 83°	Fly jib 196.9 ft 83° 1,000 lb	216.5 ft 83°	236.2 ft 83°	255.9 ft 83°	275.6 ft 83°	295.3 ft 83°	Radius ft
59	-	-	-	-	-	-	-	-	-	-	-	59
65	104.7	-	-	-	-	-	-	-	-	-	-	65
72	97.0	88.1	-	-	-	-	-	-	-	-	-	72
79	85.3	80.6	79.0	-	-	-	-	-	-	-	-	79
85	80.7	74.5	72.6	70.5	63.5	-	-	-	-	-	-	85
92	75.2	70.4	65.1	65.5	61.6	52.9	-	-	-	-	-	92
98	70.8	66.8	61.7	61.1	59.0	51.9	45.8	-	-	-	-	98
105	66.3	62.8	58.4	57.3	55.7	49.8	45.1	38.5	-	-	-	105
111	62.7	59.3	55.5	55.0	52.9	48.0	43.7	37.5	31.7	25.1	-	111
118	58.2	55.8	52.3	52.5	50.5	45.8	42.1	36.3	30.8	24.6	18.0	118
124	-	52.6	49.6	50.2	48.5	44.2	40.9	35.1	30.0	24.2	17.8	124
131	-	48.8	47.0	47.9	46.1	42.6	39.2	33.9	29.1	23.6	17.6	131
138	-	45.0	44.6	45.5	43.8	40.9	37.6	32.8	28.1	23.1	17.1	138
144	-	-	42.4	43.3	41.7	39.5	36.4	32.0	27.5	22.5	16.9	144
151	-	-	39.8	40.9	39.6	37.9	34.8	31.0	26.6	21.8	16.5	151
157	-	-	37.6	38.9	38.0	36.4	33.4	30.0	26.0	21.4	16.3	157
164	-	-	-	36.6	36.1	34.8	31.9	29.1	25.1	20.7	15.8	164
170	-	-	-	34.3	34.5	33.6	30.5	28.3	24.5	20.3	15.4	170
177	-	-	-	-	32.6	32.0	29.1	27.3	23.8	19.6	15.0	177
184	-	-	-	-	30.7	30.5	27.9	26.1	22.9	19.1	14.5	184
190	-	-	-	-	29.1	29.1	26.7	25.3	22.2	18.7	14.3	190
197	-	-	-	-	-	27.7	25.5	24.2	21.5	18.0	13.8	197
210	-	-	-	-	-	24.9	23.3	22.2	20.0	16.9	13.0	210
223	-	-	-	-	-	-	20.9	20.0	18.5	16.1	12.1	223
236	-	-	-	-	-	-	-	18.1	17.0	15.0	11.4	236
249	-	-	-	-	-	-	-	15.9	15.6	14.1	11.0	249
262	-	-	-	-	-	-	-	-	14.1	13.0	10.3	262
275	-	-	-	-	-	-	-	-	-	12.1	9.9	275
289	-	-	-	-	-	-	-	-	-	11.2	9.2	289
302	-	-	-	-	-	-	-	-	-	-	8.8	302

5

Lifting capacities luffing fly jib with SSL 60°, main boom 83°

360° DIN/ISO

183.1 ft* Main boom

Radius ft	98.4 ft 83°	118.1 ft 83°	137.8 ft 83°	157.5 ft 83°	177.2 ft 83°	Fly jib 196.9 ft 83° 1,000 lb	216.5 ft 83°	236.2 ft 83°	255.9 ft 83°	275.6 ft 83°	295.3 ft 83°	Radius ft
59	-	-	-	-	-	-	-	-	-	-	-	59
65	85.9	-	-	-	-	-	-	-	-	-	-	65
72	82.4	70.5	-	-	-	-	-	-	-	-	-	72
79	74.5	68.6	59.5	-	-	-	-	-	-	-	-	79
85	71.5	65.2	58.1	54.0	-	-	-	-	-	-	-	85
92	67.8	61.6	54.8	52.2	49.1	-	-	-	-	-	-	92
98	64.6	58.6	52.3	50.3	47.7	44.0	-	-	-	-	-	98
105	61.0	55.3	50.2	48.4	46.2	42.9	38.5	33.0	-	-	-	105
111	57.8	52.3	48.4	47.0	44.8	41.9	37.5	32.6	26.4	-	-	111
118	54.0	49.4	46.3	45.4	43.4	40.5	36.6	31.7	26.0	19.8	-	118
124	-	47.2	44.5	43.8	42.2	39.5	35.6	30.9	25.2	19.4	13.2	124
131	-	44.4	41.9	42.1	40.8	38.6	34.4	30.0	24.4	18.7	12.8	131
138	-	41.5	39.3	40.5	39.4	37.4	33.4	29.0	23.5	18.2	12.5	138
144	-	-	37.1	38.6	38.2	36.4	32.6	28.2	22.7	17.6	12.1	144
151	-	-	34.5	36.5	37.0	35.4	31.5	27.5	22.0	17.1	11.8	151
157	-	-	32.3	34.7	35.6	34.4	30.7	26.7	21.4	16.5	11.4	157
164	-	-	-	32.6	33.7	33.5	29.7	25.8	20.9	16.3	11.2	164
170	-	-	-	30.8	32.3	32.3	28.9	24.9	20.5	15.9	11.0	170
177	-	-	-	-	30.6	30.8	28.0	24.0	19.8	15.6	10.8	177
184	-	-	-	-	28.8	29.4	26.8	23.1	19.3	15.4	10.7	184
190	-	-	-	-	27.4	28.2	25.8	22.5	18.9	15.0	10.5	190
197	-	-	-	-	-	26.8	24.6	21.3	18.2	14.7	10.5	197
210	-	-	-	-	-	24.2	22.4	19.6	17.1	14.1	10.3	210
223	-	-	-	-	-	-	20.3	17.8	15.8	13.4	10.1	223
236	-	-	-	-	-	-	-	15.9	14.7	12.5	9.7	236
249	-	-	-	-	-	-	-	14.1	13.4	11.7	9.2	249
262	-	-	-	-	-	-	-	-	12.1	10.8	8.6	262
275	-	-	-	-	-	-	-	-	-	9.9	8.1	275
289	-	-	-	-	-	-	-	-	-	9.0	7.4	289
302	-	-	-	-	-	-	-	-	-	-	7.0	302
315	-	-	-	-	-	-	-	-	-	-	-	315

Remarks

Counterweight	132,300 lb	176,400 lb	220,500 lb	264,600 lb	308,700 lb	352,800 lb	407,900 lb

Max. capacities with minimum counterweight

Further counterweight configurations on request

Technical description

Carrier

Drive/steering:	16 x 8 x 14.
Frame:	Demag-built special main frame of high-strength fine-grain structural steel, with pot-shaped centre section and foldaway outrigger boxes.
Outriggers:	4-point outrigger system, folding outrigger beams, fully hydraulic horizontal and vertical extension, providing 360° continuous rotation. Outrigger loading indicator.
Engine:	Water-cooled 8-cylinder DaimlerChrysler diesel engine OM 502 LA, output 448 kW (610 hp) at 1800 ¹/min, torque 2700 Nm at 1200 ¹/min. Fuel tank capacity: 156 gallons.
Transmission:	Allison type CLBT 755 with electronic transmission control (ATEC), torque converter and hydraulic retarder.
Axles:	1 + 2 + 5 driving, connectable drive of axle 3, 1-4 and 6-8 steering, all axles hydropneumatically suspended and hydraulically blockable.
Wheels and tires:	16 wheels, 14.00-R 25.
Steering:	Dual-circuit semiblock mechanical steering with hydraulic booster.
Brakes:	In conformity with EC-directives. Sustained action brake: constant decompression valve, exhaust brake, hydr. retarder integrated into gearbox.
Electrical equipment:	24 V system, lighting in compliance with German StVZO.
Driver's cab:	Rubber-mounted low-line steel cab, ergonomic design, with pneumatically suspended driver's seat and one passenger's seat; vertically adjustable steering wheel; heated outside mirrors, mirror electrically adjustable; dashboard with clearly arranged instrumentation and carrier controls.

Superstructure

Engine:	Water-cooled 6-cylinder DaimlerChrysler diesel engine OM 906 LA, output: 205 kW (279 hp) at 2300 ¹/min, torque 1100 Nm at 1300 ¹/min. Fuel tank capacity: 79 gallons.
Hydraulic system:	Powered via 5 hydraulic circuits, 4 main pumps for independent control movements, 1 pump for auxiliary circuits, one control pump for the servo control.
Hoist I:	Axial-piston variable displacement motor, hoist drum with integrated planetary gear reducer, and brake.
Slew unit:	Axial piston motor with planetary gearing, spring-applied automatic holding brake.
Boom elevation:	2 differential cylinders with pilot-controlled lowering brake valves.
Control:	Electrical pilot-control by two self-centering servo levers.
Crane cab:	Spacious all-steel comfortable cab (tiltable) with sliding door and large hinged windscreen, roof window with armoured glass, full instrumentation and crane controls, comfortable seat with ergonomic armrest mounted joystick controls, working light. Self-contained hot water heater with timer and 'Heizmatic' for sensitive heat flow control. Intermittent control window wiper and washer, air-conditioning.
Main boom:	Boom base and four telescopic sections fabricated from fine grain structural steel, telescoping with partial load. Buckling-resistant Demag ovaloid design with diagonally arranged self-centering slider shoes.
Counterweight:	220,500 lb, divisible.
Safety devices:	Electronic safe load indicator with large graphic display and sealed touch-type keyboard, digital read-out for hook load, nominal load, boom length, angle, and radius. Analog display to indicate the capacity utilization, and monitoring code to assist in trouble shooting. Integrated control system for boom telescoping, display for load charts and both theoretical and measured outrigger loadings. In addition, provision has been made for: limit switches on hoist and lowering motions, pressure relief and safety holding valves, hoist rotation indicator and anemometer.

6

Optional equipment

Superlift attachment:	This attachment is used to increase the crane's load moment. It consists of the boom suspension mast with pendant ropes, which provides for an automatic rope length adjustment for boom telescoping, and a 132,300 lb additional counterweight. The suspension mast is lowered to the main boom when not needed, or for road transport (axle loads to be observed).
Main boom extension:	Lattice extension consisting of components of the 295.3 ft luffing jib, 19.7 – 98.4 ft long, 0°, 20° and 40° offset from 39.3 ft length.
Fixed fly jib:	Fixed lattice jib, comprising of parts of the luffing jib, 27.6 – 204.7 ft long (system LF).
Luffing jib:	78.7 – 295.3 ft, plus 13.1 ft adapter, with two luffing masts, pendant bars, electrical equipment, safety devices (hoist II is required when using the luffing jib).
Additional counterweight:	132,300 lb, integrated into the standard counterweight, installed by the crane itself.
Additional jack leg:	For special duties with 48.2 ft main boom.
Hoist II:	Axial piston variable displacement motor, hoist drum with integrated planetary reduction, spring-applied multi-disk brake, hoist rope.
Independent rear axle steering	

Overview of standard duty charts

31.6 x 31.5 ft

Main boom

Main boom	0	44,1	88,2	132,3	176,4	220,5	264,6	308,7	352,8	407,9
	1,000 lb									
	360°	360°	360°	360°	360°	360°	360°	360°	360°	360°
48,2 ft	x	x	x	x	x	x	x	x	x	-
63,3 ft	x	x	x	x	x	x	x	x	x	-
78,7 ft	x	x	x	x	x	x	x	x	x	-
93,8 ft	x	x	x	x	x	x	x	x	x	-
108,9 ft	x	x	x	x	x	x/+SSL	x/+SSL	x/+SSL	x/+SSL	+ SSL
124,3 ft	x	x	x	x	x	x/+SSL	x/+SSL	x/+SSL	x/+SSL	+ SSL
139,4 ft	x	x	x	x	x	x/+SSL	x/+SSL	x/+SSL	x/+SSL	+ SSL
154,9 ft	x	x	x	x	x	x/+SSL	x/+SSL	x/+SSL	x/+SSL	+ SSL
170,0 ft	x	x	x	x	x	x/+SSL	x/+SSL	x/+SSL	x/+SSL	+ SSL
183,7 ft	x	x	x	x	x	x/+SSL	x/+SSL	x/+SSL	x/+SSL	+ SSL

26,4 x 24,0 ft

Main boom

Main boom	0	44,1	88,2	132,3	176,4	220,5
	1,000 lb					
	360°	360°	360°	360°	360°	360°
48,2 ft	x	x	x	x	x	x
63,3 ft	x	x	x	x	x	x
78,7 ft	x	x	x	x	x	x
93,8 ft	x	x	x	x	x	x
108,9 ft	x	x	x	x	x	x
124,3 ft	x	x	x	x	x	x
139,4 ft	x	x	x	x	x	x
154,9 ft	-	x	x	x	x	x
170,0 ft	-	x	x	x	x	x
183,7 ft	-	x	x	x	x	x

31.6 x 31.5 ft

Main boom extension

Main boom	Extension		88,2	132,3	176,4	220,5	264,6	308,7	352,8	407,9
		1,000 lb								
183,7 ft	19,7 ft - 0°	SSL=0°	x	x	x	x/+SSL	x/+SSL	x/+SSL	+ SSL	+ SSL
	39,3 ft - 0°	SSL=0°	x	x	x	x/+SSL	x/+SSL	x/+SSL	+ SSL	+ SSL
	59,0 ft - 0°	SSL=0°	x	x	x	x/+SSL	x/+SSL	x/+SSL	+ SSL	+ SSL
	78,7 ft - 0°	SSL=0°	x	x	x	x/+SSL	x/+SSL	x/+SSL	+ SSL	+ SSL
	98,4 ft - 0°	SSL=0°	x	x	x	x/+SSL	x/+SSL	x/+SSL	+ SSL	+ SSL
	39,3 ft - 0°	SSL=30°	x	x	x/+SSL	x/+SSL	x/+SSL	x/+SSL	+ SSL	+ SSL
	59,0 ft - 0°	SSL=30°	x	x	x/+SSL	x/+SSL	x/+SSL	x/+SSL	+ SSL	+ SSL
	78,7 ft - 0°	SSL=30°	x	x	x/+SSL	x/+SSL	x/+SSL	x/+SSL	+ SSL	+ SSL
	98,4 ft - 0°	SSL=30°	x	x	x/+SSL	x/+SSL	x/+SSL	x/+SSL	+ SSL	+ SSL
	39,3 ft - 20°	SSL=0°	x	x	x	x/+SSL	x/+SSL	x/+SSL	+ SSL	+ SSL
	59,0 ft - 20°	SSL=0°	x	x	x	x/+SSL	x/+SSL	x/+SSL	+ SSL	+ SSL
	78,7 ft - 20°	SSL=0°	x	x	x	x/+SSL	x/+SSL	x/+SSL	+ SSL	+ SSL
	98,4 ft - 20°	SSL=0°	x	x	x	x/+SSL	x/+SSL	x/+SSL	+ SSL	+ SSL
	39,3 ft - 40°	SSL=0°	x	x	x	x/+SSL	x/+SSL	+ SSL	+ SSL	-
	59,0 ft - 40°	SSL=0°	x	x	x	x/+SSL	x/+SSL	+ SSL	+ SSL	-
	78,7 ft - 40°	SSL=0°	x	x	x	x/+SSL	x/+SSL	+ SSL	+ SSL	-
	98,4 ft - 40°	SSL=0°	x	x	x	x/+SSL	x/+SSL	+ SSL	+ SSL	-

26,4 x 24,0 ft

Main boom extension

Main boom	Extension	88,2	132,3	176,4	220,5
		1,000 lb			
183,7 ft	19,7 ft - 0°	x	x	x	x
	39,3 ft - 0°	x	x	x	x
	59,0 ft - 0°	x	x	x	x
	78,7 ft - 0°	x	x	x	x
	98,4 ft - 0°	x	x	x	x
	39,3 ft - 20°	x	x	x	x
	59,0 ft - 20°	x	x	x	x
	78,7 ft - 20°	x	x	x	x
	98,4 ft - 20°	x	x	x	x
	39,3 ft - 40°	x	x	x	x
	59,0 ft - 40°	x	x	x	x
	78,7 ft - 40°	x	x	x	x
	98,4 ft - 40°	x	x	x	x

31.6 x 31.5 ft

Fixed fly jib

Main boom	Jib	88,2	132,3	176,4	220,5	264,6	308,7	352,8	407,9
		1,000 lb							
139,4 ft	27,6 ft - 0°	x	x	x	x	x	x	x	-
	47,2 ft - 0°	x	x	x	x	x	x	x	-
	66,9 ft - 0°	x	x	x	x	x	x	x	-
	86,6 ft - 0°	x	x	x	x	x	x	x	-
	106,3 ft - 0°	x	x	x	x	x	x	x	-
	126,0 ft - 0°	x	x	x	x	x	x	x	-
	145,7 ft - 0°	x	x	x	x	x	x	x	-
	165,4 ft - 0°	x	x	x	x	x	x	x	-
	185,0 ft - 0°	x	x	x	x	x	x	x	-
	204,7 ft - 0°	x	x	x	x	x	x	x	-
	86,6 ft - 20°	x	x	x	x	x	x	-	-
	106,3 ft - 20°	x	x	x	x	x	x	-	-
	126,0 ft - 20°	x	x	x	x	x	x	-	-
	145,7 ft - 20°	x	x	x	x	x	x	-	-
	165,4 ft - 20°	x	x	x	x	x	x	-	-
	185,0 ft - 20°	x	x	x	x	x	x	-	-
	204,7 ft - 20°	x	x	x	x	x	x	-	-
	86,6 ft - 40°	x	x	x	x	x	-	-	-
	106,3 ft - 40°	x	x	x	x	x	-	-	-
	126,0 ft - 40°	x	x	x	x	x	-	-	-
	145,7 ft - 40°	x	x	x	x	x	-	-	-
	165,4 ft - 40°	x	x	x	x	x	-	-	-
	185,0 ft - 40°	x	x	x	x	x	-	-	-
	204,7 ft - 40°	x	x	x	x	x	-	-	-

Main boom	Jib	88,2	132,3	176,4**	220,5	264,6	308,7	352,8	407,9
		1,000 lb							
		SSL 0° + 30°							
170,0 ft	27,6 ft - 0°	x	x	x/+SSL	x/+SSL	x/+SSL	x/+SSL	x/+SSL	+ SSL
	47,2 ft - 0°	x	x	x/+SSL	x/+SSL	x/+SSL	x/+SSL	x/+SSL	+ SSL
	66,9 ft - 0°	x	x	x/+SSL	x/+SSL	x/+SSL	x/+SSL	x/+SSL	+ SSL
	86,6 ft - 0°	x	x	x/+SSL	x/+SSL	x/+SSL	x/+SSL	x/+SSL	+ SSL
	106,3 ft - 0°	x	x	x/+SSL	x/+SSL	x/+SSL	x/+SSL	x/+SSL	+ SSL
	126,0 ft - 0°	x	x	x/+SSL	x/+SSL	x/+SSL	x/+SSL	x/+SSL	+ SSL
	145,7 ft - 0°	x	x	x/+SSL	x/+SSL	x/+SSL	x/+SSL	x/+SSL	+ SSL
	165,4 ft - 0°	x	x	x/+SSL	x/+SSL	x/+SSL	x/+SSL	x/+SSL	+ SSL
		SSL 0°							
	86,6 ft - 20°	x	x	x	x/+SSL	x/+SSL	x/+SSL	+ SSL	-
	106,3 ft - 20°	x	x	x	x/+SSL	x/+SSL	x/+SSL	+ SSL	-
	126,0 ft - 20°	x	x	x	x/+SSL	x/+SSL	x/+SSL	+ SSL	-
	145,7 ft - 20°	x	x	x	x/+SSL	x/+SSL	x/+SSL	+ SSL	-
	165,4 ft - 20°	x	x	x	x/+SSL	x/+SSL	x/+SSL	+ SSL	-
		SSL 0°							
	86,6 ft - 40°	x	x	x	x/+SSL	x/+SSL	+ SSL	-	-
	106,3 ft - 40°	x	x	x	x/+SSL	x/+SSL	+ SSL	-	-
	126,0 ft - 40°	x	x	x	x/+SSL	x/+SSL	+ SSL	-	-
	145,7 ft - 40°	x	x	x	x/+SSL	x/+SSL	+ SSL	-	-
	165,4 ft - 40°	x	x	x	x/+SSL	x/+SSL	+ SSL	-	-

** 80 t only SSL 30°

(909) 222-0202 www.reliablecraneservice.com 260 North Smith Ave. Corona, CA 92880

31.6 x 31.5 ft

Luffing fly jib

Main boom	Jib	88,2	132,3	176,4	220,5	264,6	308,7	352,8	407,9
		1,000 lb							
		83° / 73 ° / 65°							
61.35 ft* 76.44 ft* 91.86 ft* 106.96 ft* 122.05 ft*	78.7 ft	-	x/-/-	x/-/-	x/x/x	x/x/x	x/x/x	x/x/x	x/x/x
	98.4 ft	-	x/-/-	x/-/-	x/x/x	x/x/x	x/x/x	x/x/x	x/x/x
	118.1 ft	-	x/-/-	x/-/-	x/x/x	x/x/x	x/x/x	x/x/x	x/x/x
	137.8 ft	-	x/-/-	x/-/-	x/x/x	x/x/x	x/x/x	x/x/x	x/x/x
	157.5 ft	-	x/-/-	x/-/-	x/x/x	x/x/x	x/x/x	x/x/x	x/x/x
	177.2 ft	-	x/-/-	x/-/-	x/x/x	x/x/x	x/x/x	x/x/x	x/x/x
	196.9 ft	-	x/-/-	x/-/-	x/x/x	x/x/x	x/x/x	x/x/x	x/x/x
	216.5 ft	-	x/-/-	x/-/-	x/x/x	x/x/x	x/x/x	x/x/x	x/x/x
	236.2 ft	-	-	x/-/-	x/x/x	x/x/x	x/x/x	x/x/x	x/x/x
	255.9 ft	-	-	x/-/-	x/x/x	x/x/x	x/x/x	x/x/x	x/x/x
	275.6 ft	-	-	-	x/x/x	x/x/x	x/x/x	x/x/x	x/x/x
	295.3 ft	-	-	-	x/x/x	x/x/x	x/x/x	x/x/x	x/x/x

Main boom	Jib	88,2	132,3	176,4	220,5	264,6	308,7	352,8	407,9
		1,000 lb							
		83° / 73 ° / 65°							
167.98 ft*	78.7 ft	-	x/-/-	x/-/-	x/x/-	x/x/-	x/x/-	-	-
	98.4 ft	-	x/-/-	x/-/-	x/x/x	x/x/x	x/x/x	-	-
	118.1 ft	-	x/-/-	x/-/-	x/x/x	x/x/x	x/x/x	-	-
	137.8 ft	-	x/-/-	x/-/-	x/x/x	x/x/x	x/x/x	-	-
	157.5 ft	-	x/-/-	x/-/-	x/x/x	x/x/x	x/x/x	-	-
	177.2 ft	-	x/-/-	x/-/-	x/x/x	x/x/x	x/x/x	-	-
	196.9 ft	-	x/-/-	x/-/-	x/x/x	x/x/x	x/x/x	-	-
	216.5 ft	-	x/-/-	x/-/-	x/x/-	x/x/-	x/x/-	-	-
	236.2 ft	-	-	x/-/-	x/x/-	x/x/-	x/x/-	-	-
	255.9 ft	-	-	x/-/-	x/-/-	x/-/-	x/-/-	-	-
	275.6 ft	-	-	-	x/-/-	x/-/-	x/-/-	-	-
	295.3 ft	-	-	-	x/-/-	x/-/-	x/-/-	-	-

Main boom	Jib	88,2	132,3	176,4	220,5	264,6	308,7	352,8	407,9
		1,000 lb							
		83° / 73 ° / 65°							
137.47 ft*	78.7 ft	-	x/-/-	x/-/-	x/x/x	x/x/x	x/x/x	x/x/x	x/x/x
	98.4 ft	-	x/-/-	x/-/-	x/x/x	x/x/x	x/x/x	x/x/x	x/x/x
	118.1 ft	-	x/-/-	x/-/-	x/x/x	x/x/x	x/x/x	x/x/x	x/x/x
	137.8 ft	-	x/-/-	x/-/-	x/x/x	x/x/x	x/x/x	x/x/x	x/x/x
	157.5 ft	-	x/-/-	x/-/-	x/x/x	x/x/x	x/x/x	x/x/x	x/x/x
	177.2 ft	-	x/-/-	x/-/-	x/x/x	x/x/x	x/x/x	x/x/x	x/x/x
	196.9 ft	-	x/-/-	x/-/-	x/x/x	x/x/x	x/x/x	x/x/x	x/x/x
	216.5 ft	-	x/-/-	x/-/-	x/x/x	x/x/x	x/x/x	x/x/x	x/x/x
	236.2 ft	-	-	x/-/-	x/x/x	x/x/x	x/x/x	x/x/x	x/x/x
	255.9 ft	-	-	x/-/-	x/x/x	x/x/x	x/x/x	x/x/x	x/x/x
	275.6 ft	-	-	-	x/x/x	x/x/x	x/x/x	x/x/x	x/x/x
	295.3 ft	-	-	-	x/x/-	x/x/-	x/x/-	x/x/-	x/x/-

Main boom	Jib	88,2	132,3	176,4	220,5	264,6	308,7	352,8	407,9
		1,000 lb							
		83° / 73 ° / 65°							
183.07 ft*	78.7 ft	-	x/-/-	x/-/-	x/x/-	x/x/-	-	-	-
	98.4 ft	-	x/-/-	x/-/-	x/x/x	x/x/x	-	-	-
	118.1 ft	-	x/-/-	x/-/-	x/x/x	x/x/x	-	-	-
	137.8 ft	-	x/-/-	x/-/-	x/x/x	x/x/x	-	-	-
	157.5 ft	-	x/-/-	x/-/-	x/x/x	x/x/x	-	-	-
	177.2 ft	-	x/-/-	x/-/-	x/x/x	x/x/x	-	-	-
	196.9 ft	-	x/-/-	x/-/-	x/x/x	x/x/x	-	-	-
	216.5 ft	-	x/-/-	x/-/-	x/x/-	x/x/-	-	-	-
	236.2 ft	-	-	x/-/-	x/x/-	x/x/-	-	-	-
	255.9 ft	-	-	x/-/-	x/-/-	x/-/-	-	-	-
	275.6 ft	-	-	-	x/-/-	x/-/-	-	-	-
	295.3 ft	-	-	-	x/-/-	x/-/-	-	-	-

Main boom	Jib	88,2	132,3	176,4	220,5	264,6	308,7	352,8	407,9
		1,000 lb							
		83° / 73 ° / 65°							
152.56 ft*	78.7 ft	-	x/-/-	x/-/-	x/x/x	x/x/x	x/x/x	x/x/x	-
	98.4 ft	-	x/-/-	x/-/-	x/x/x	x/x/x	x/x/x	x/x/x	-
	118.1 ft	-	x/-/-	x/-/-	x/x/x	x/x/x	x/x/x	x/x/x	-
	137.8 ft	-	x/-/-	x/-/-	x/x/x	x/x/x	x/x/x	x/x/x	-
	157.5 ft	-	x/-/-	x/-/-	x/x/x	x/x/x	x/x/x	x/x/x	-
	177.2 ft	-	x/-/-	x/-/-	x/x/x	x/x/x	x/x/x	x/x/x	-
	196.9 ft	-	x/-/-	x/-/-	x/x/x	x/x/x	x/x/x	x/x/x	-
	216.5 ft	-	x/-/-	x/-/-	x/x/x	x/x/x	x/x/x	x/x/x	-
	236.2 ft	-	-	x/-/-	x/x/x	x/x/x	x/x/x	x/x/x	-
	255.9 ft	-	-	x/-/-	x/x/x	x/x/x	x/x/x	x/x/x	-
	275.6 ft	-	-	-	x/x/x	x/x/x	x/x/x	x/x/x	-
	295.3 ft	-	-	-	x/x/-	x/x/-	x/x/-	x/x/-	-

** incl. 13.1 ft adapter

with SSL 0°

Jib	Main boom 122.05 ft**				Main boom 152.56 ft**			
	264,6	308,7	352,8	407,9	264,6	308,7	352,8	407,9
	1,000 lb							
	83° / 73° / 65°							
98.4 ft	x/x/x	x/x/x	x/x/x	x/x/x	x/x/x	x/x/x	x/x/x	x/x/x
118.1 ft	x/x/x	x/x/x	x/x/x	x/x/x	x/x/x	x/x/x	x/x/x	x/x/x
137.8 ft	x/x/x	x/x/x	x/x/x	x/x/x	x/x/x	x/x/x	x/x/x	x/x/x
157.5 ft	x/x/x	x/x/x	x/x/x	x/x/x	x/x/x	x/x/x	x/x/x	x/x/x
177.2 ft	x/x/x	x/x/x	x/x/x	x/x/x	x/x/x	x/x/x	x/x/x	x/x/x
196.9 ft	x/x/x	x/x/x	x/x/x	x/x/x	x/x/x	x/x/x	x/x/x	x/x/x
216.5 ft	x/x/x	x/x/x	x/x/x	x/x/x	x/x/x	x/x/x	x/x/x	x/x/x
236.2 ft	x/x/x	x/x/x	x/x/x	x/x/x	x/x/-	x/x/x	x/x/x	x/x/x
255.9 ft	x/x/-	x/x/x	x/x/x	x/x/x	x/x/-	x/x/-	x/x/x	x/x/x
275.6 ft	x/x/-	x/x/x	x/x/x	x/x/x	x/x/-	x/x/-	x/x/x	x/x/x
295.3 ft	x/x/-	x*/x/-	x/x/x	x/x/x	x/x/-	x/x/-	x/x/x	x/x/x

Jib	Main boom 167.98 ft**				Main boom 183.07 ft**			
	264,6	308,7	352,8	407,9	264,6	308,7	352,8	407,9
	1,000 lb							
	83° / 73° / 65°							
98.4 ft	x/x/x	x/x/x	x/x/x	x/x/x	x/x/x	x/x/x	x/x/x	x/x/x
118.1 ft	x/x/x	x/x/x	x/x/x	x/x/x	x/x/x	x/x/x	x/x/x	x/x/x
137.8 ft	x/x/x	x/x/x	x/x/x	x/x/x	x/x/x	x/x/x	x/x/x	x/x/x
157.5 ft	x/x/x	x/x/x	x/x/x	x/x/x	x/x/x	x/x/x	x/x/x	x/x/x
177.2 ft	x/x/x	x/x/x	x/x/x	x/x/x	x/x/x	x/x/x	x/x/x	x/x/x
196.9 ft	x/x/x	x/x/x	x/x/x	x/x/x	x/x/x	x/x/x	x/x/x	x/x/x
216.5 ft	x/x/-	x/x/x	x/x/x	x/x/x	x/x/-	x/x/x	x/x/x	x/x/x
236.2 ft	x/x/-	x/x/x	x/x/x	x/x/x	x/x/-	x/x/-	x/x/x	x/x/x
255.9 ft	x/x/-	x/x/-	x/x/x	x/x/x	x/x/-	x/x/-	x/x/x	x/x/x
275.6 ft	x/x/-	x/x/-	x/x/x	x/x/x	x/x/-	x/x/-	x/x/x	x/x/x
295.3 ft	-	-	-	-	-	-	-	-

with SSL 60°

Main boom	Jib	88,2	132,3	176,4	220,5	264,6	308,7	352,8	407,9
		1,000 lb							
		83°							
122.05 ft** 137.47 ft** 152.56 ft** 167.98 ft** 183.04 ft**	98.4 ft	-	-	x	x	x	x	x	x
	118.1 ft	-	-	x	x	x	x	x	x
	137.8 ft	-	-	x	x	x	x	x	x
	157.5 ft	-	-	x	x	x	x	x	x
	177.2 ft	-	-	x	x	x	x	x	x
	196.9 ft	-	-	x	x	x	x	x	x
	216.5 ft	-	-	x	x	x	x	x	x
	236.2 ft	-	-	x	x	x	x	x	x
	255.9 ft	-	-	x	x	x	x	x	x
	275.6 ft	-	-	-	x	x	x	x	x
	295.3 ft	-	-	-	x	x	x	x	x

26.4 x 24.0 ft

Main boom	Jib	88,2	132,3	176,4	220,5	264,6	308,7	352,8	407,9
		1,000 lb							
61.35 ft** 76.44 ft** 91.86 ft** 106.96 ft** 122.05 ft** 137.47 ft** 152.56 ft** 167.98 ft** 183.04 ft**	78.7 ft	-	x	x	x	-	-	-	-
	98.4 ft	-	x	x	x	-	-	-	-
	118.1 ft	-	x	x	x	-	-	-	-
	137.8 ft	-	x	x	x	-	-	-	-
	157.5 ft	-	x	x	x	-	-	-	-
	177.2 ft	-	x	x	x	-	-	-	-
	196.9 ft	-	x	x	x	-	-	-	-
	216.5 ft	-	-	x	x	-	-	-	-
	236.2 ft	-	-	-	x	-	-	-	-
	255.9 ft	-	-	-	x	-	-	-	-

Key

Counterweight

Lifting capacities on outriggers 360°

„D"

SL: Superlift

The information contained in this brochure merely consists of general descriptions and a broad compilation of performance features which might not apply precisely as described under specific application conditions or which may change as a result of further product development.
The desired performance features only become binding once expressly agreed in the final contract.

Subject to change without notice. · Machine operation is subject to computer charts only. 03/03

Terex Cranes Wilmington Operations
Mobile hydraulic and lattice-boom cranes
202 Raleigh St.
Wilmington, NC 28412 USA
Phone +1 910 395 8500
Fax +1 910 395 8538
Email american@american-crane.com

Order Nr. AC 500-1 USA C1 – 201 111 12

Bigge Crane and Rigging Co.
10700 Bigge Avenue
San Leandro, CA 94577
Phone: (888) 337-BIGGE or (510) 638-8100
Fax: (510) 639-4053
Email: info@bigge.com
Web site: www.bigge.com

www.terex-cranes.com